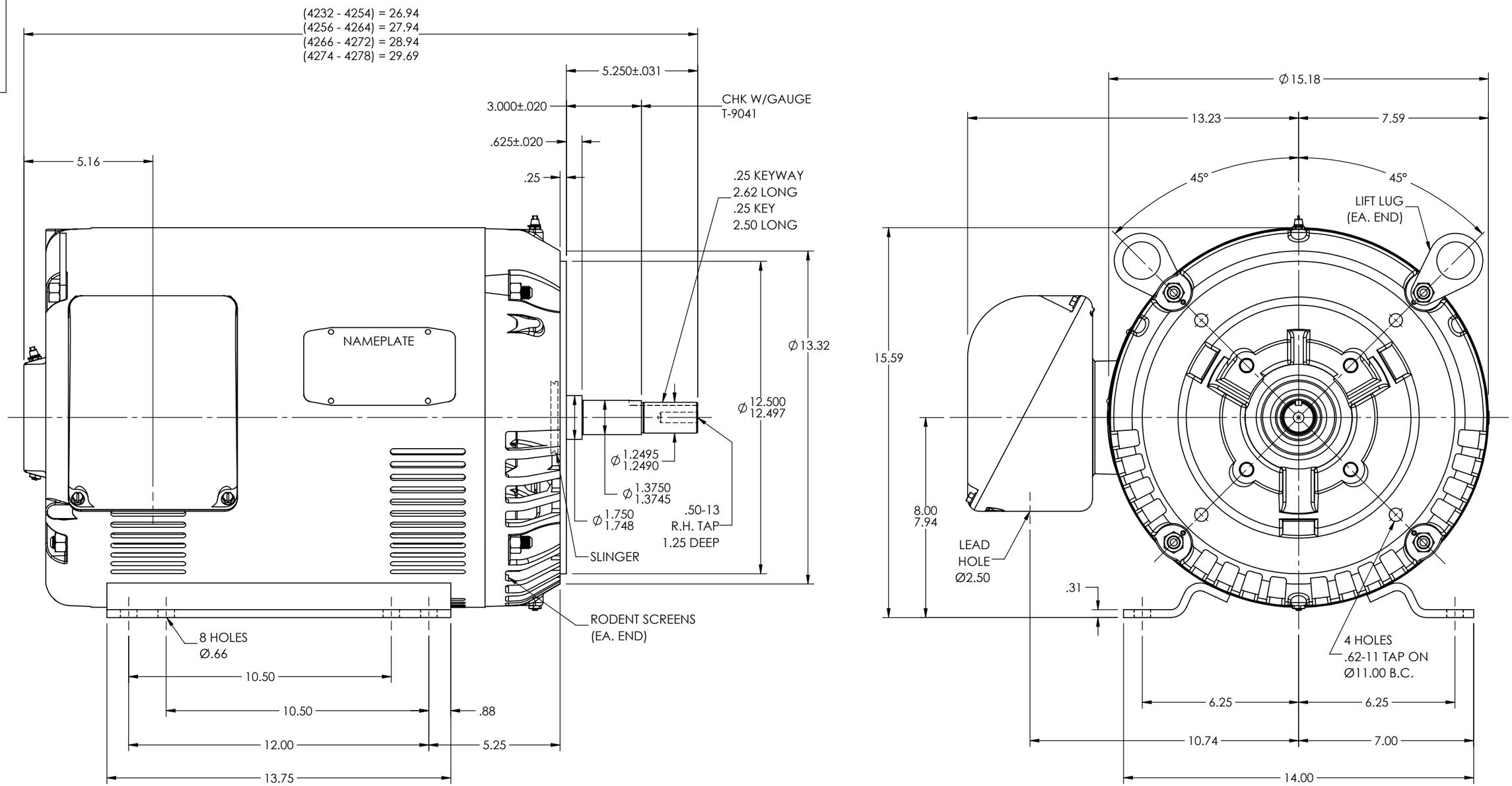

CUSTOMER IS RESPONSIBLE FOR DETERMINING THAT THE PRODUCT WILL PERFORM SUITABLY IN THE INTENDED APPLICATION

REV. DESC: REMOVED GREASER & RELIEF CALL OUT			
REV: M	VERSION: 06	REVISED: 12:54:15 03/22/2024	TDR: 000001228298
MODEL NO. 42LYF059			REF: -
BY: ENSHAB0			B

BALDOR - RELIANCE®

HOR OPSB 324-6JM W/RODENT SCREENS

42LYF059