40LYE211

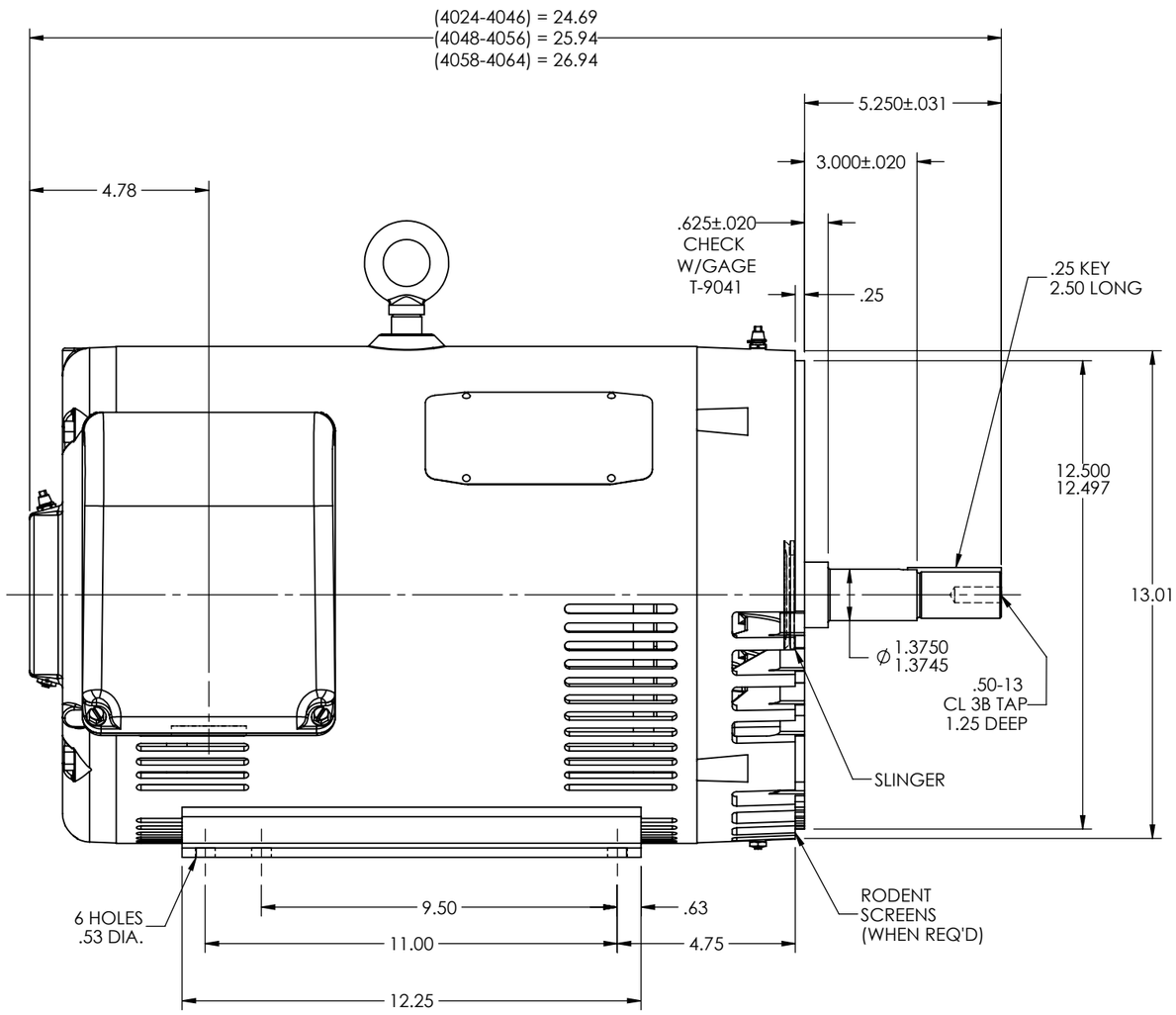

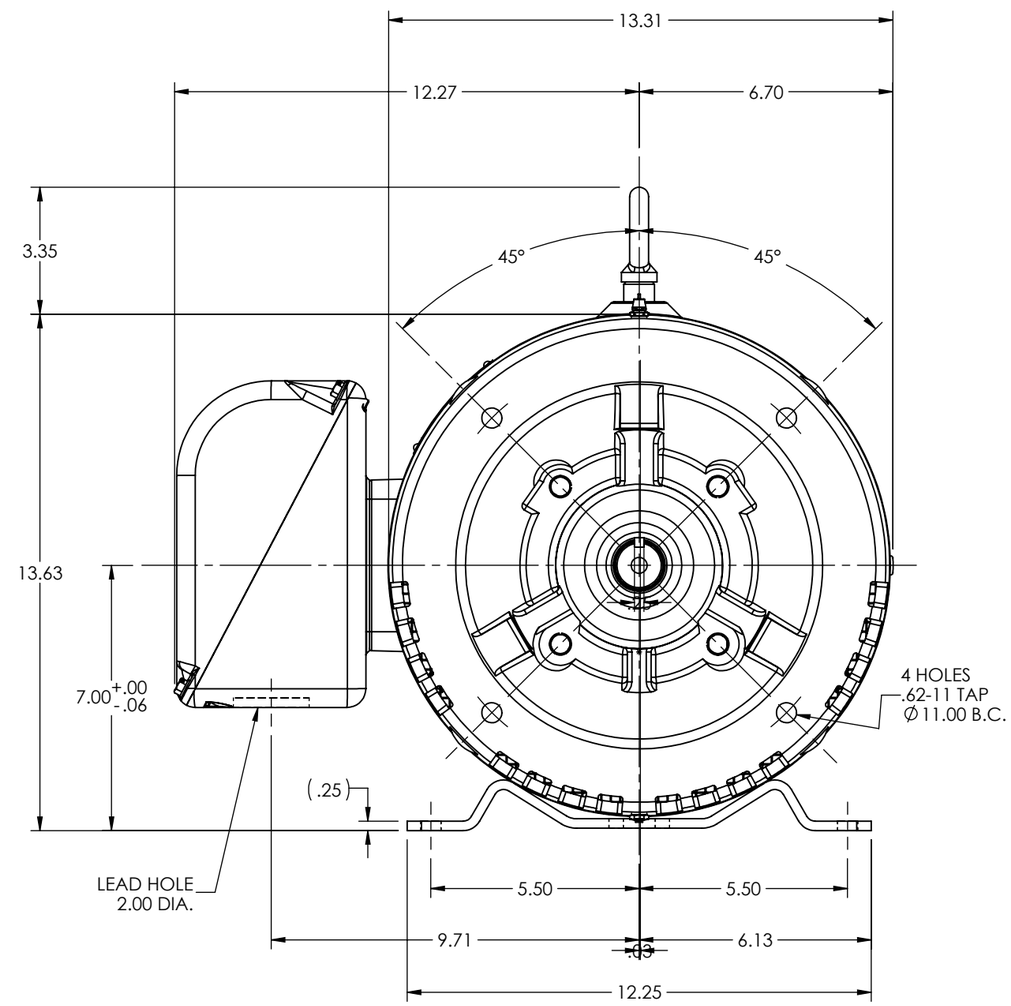

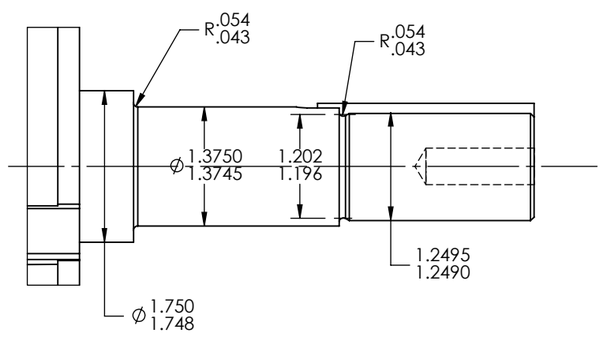

CUSTOMER IS RESPONSIBLE FOR DETERMINING THAT BALDOR'S PRODUCT WILL PERFORM SUITABLY IN THE INTENDED APPLICATION

REV. DESC: CONVERT DRW FROM AUTOCAD TO SWD			
REV: F	VERSION: 06	REVISED: 08:04:01 11/10/2023	TDR: 000001220227
MODEL NO. 40LYE211			REF: -
BY: USALMAZ			B

BALDOR

HORZ OPSB 284-6JM, SUPER-E

40LYE211