10LYJ484

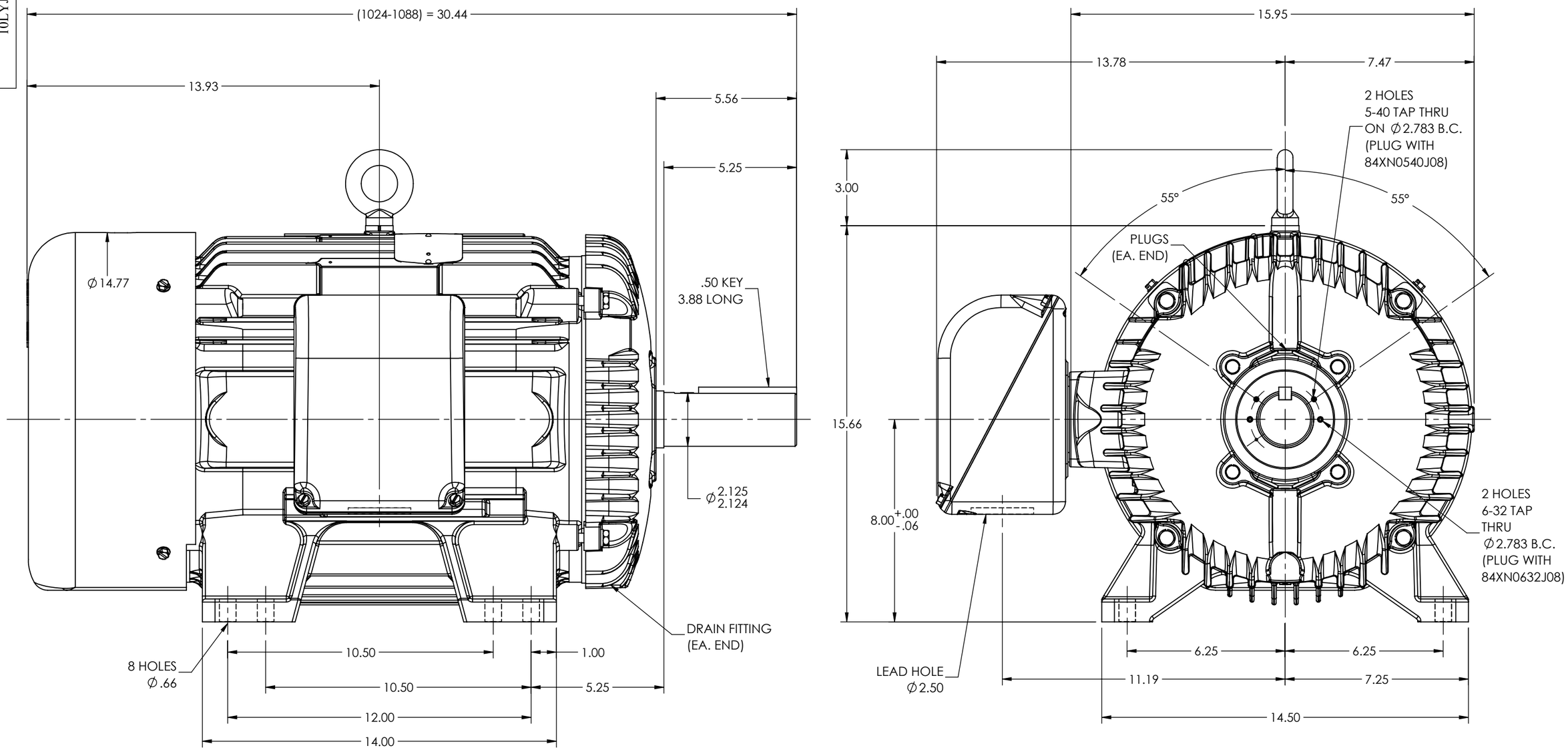

CUSTOMER IS RESPONSIBLE FOR DETERMINING THAT THE PRODUCT WILL PERFORM SUITABLY IN THE INTENDED APPLICATION

REV. DESC: ADD 6-32 TAP HOLE CALLOUT			
REV: D	VERSION: 04	REVISED: 11:23:36 04/10/2024	TDR: 000001227383
MODEL NO. 10LYJ484			REF: -
BY: ENSTEK0			B

BALDOR - RELIANCE®

HORZ TEFC 324-6T W/DUAL SH GND MTG,GRSR & RLF PLUGS

10LYJ484