37LYJ637

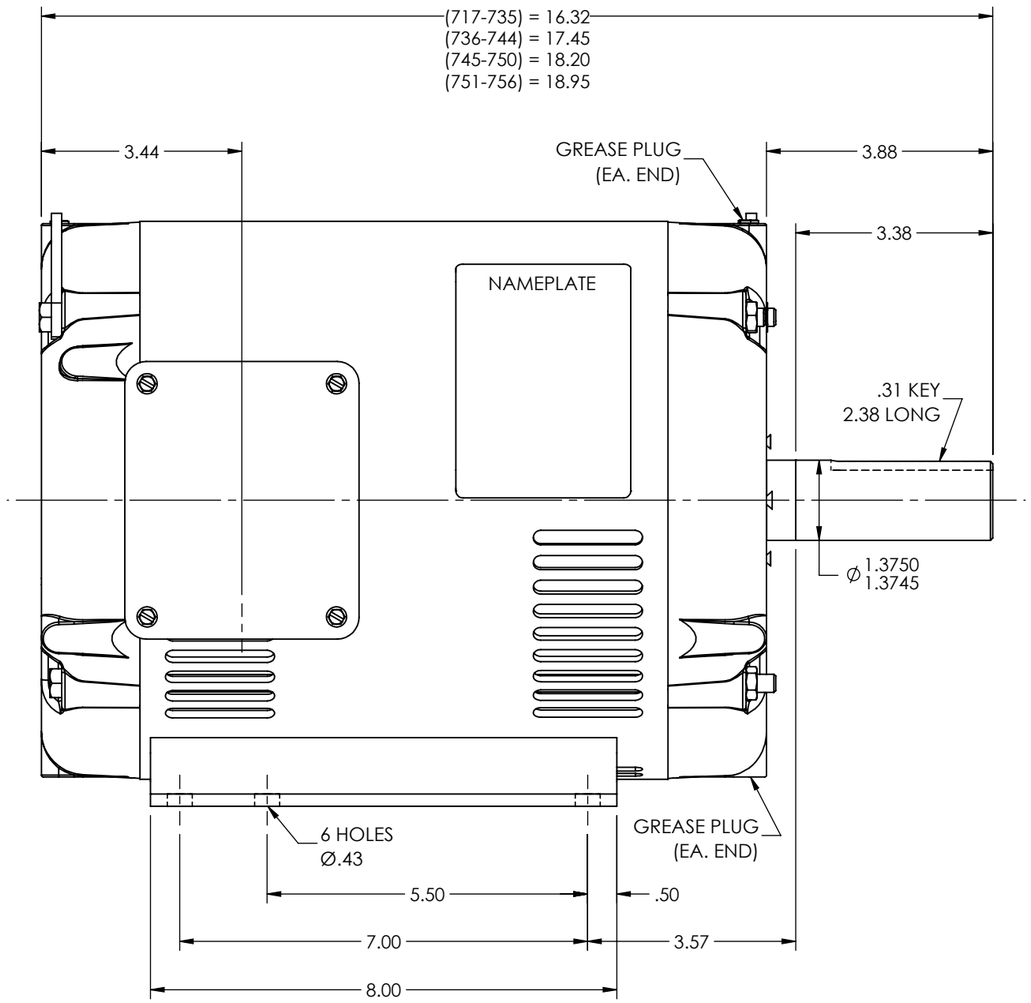

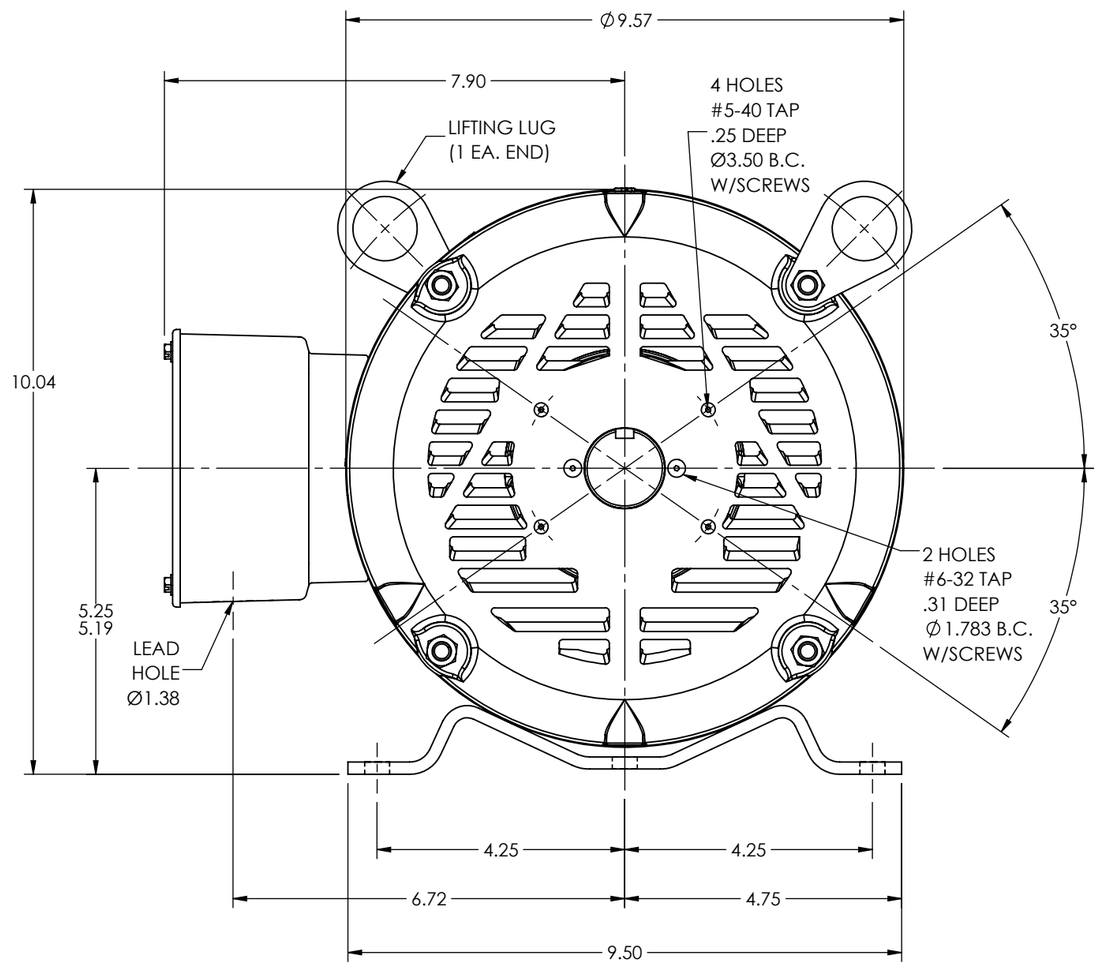

CUSTOMER IS RESPONSIBLE FOR DETERMINING THAT THE PRODUCT WILL PERFORM SUITABLY IN THE INTENDED APPLICATION

REV. DESC: ADD 6-32 TAP HOLE CALLOUT			
REV: E	VERSION: 05	REVISED: 12:23:27 03/21/2024	TDR: 000001227383
MODEL NO. 37LYJ637			REF: -
BY: ENSTEK0			B

BALDOR - RELIANCE®

HORZ 213-5T OPSB M W/PLUGGED GRSR & REL(HVAC), AEGIS MNT

37LYJ637