44LYE125

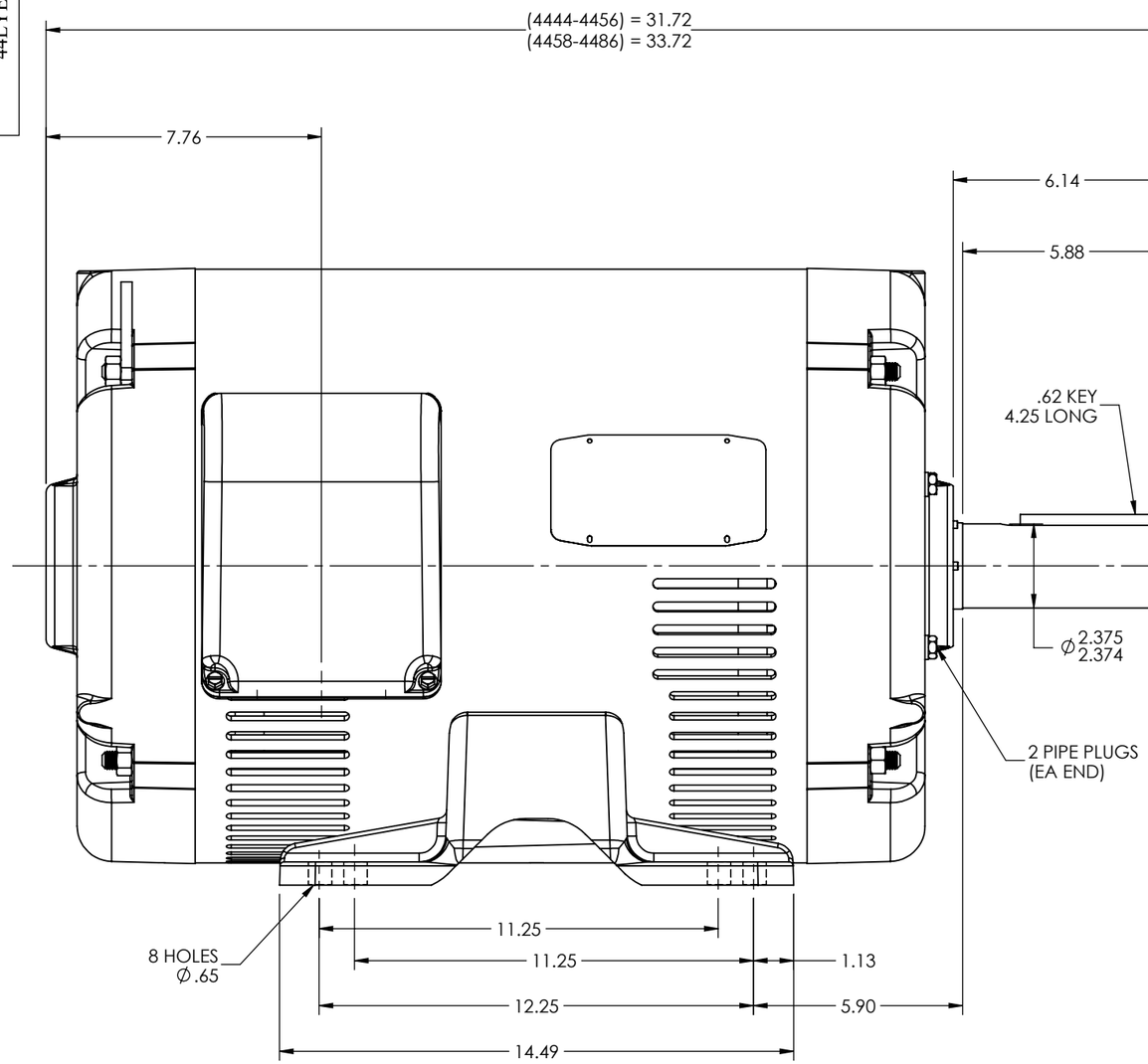

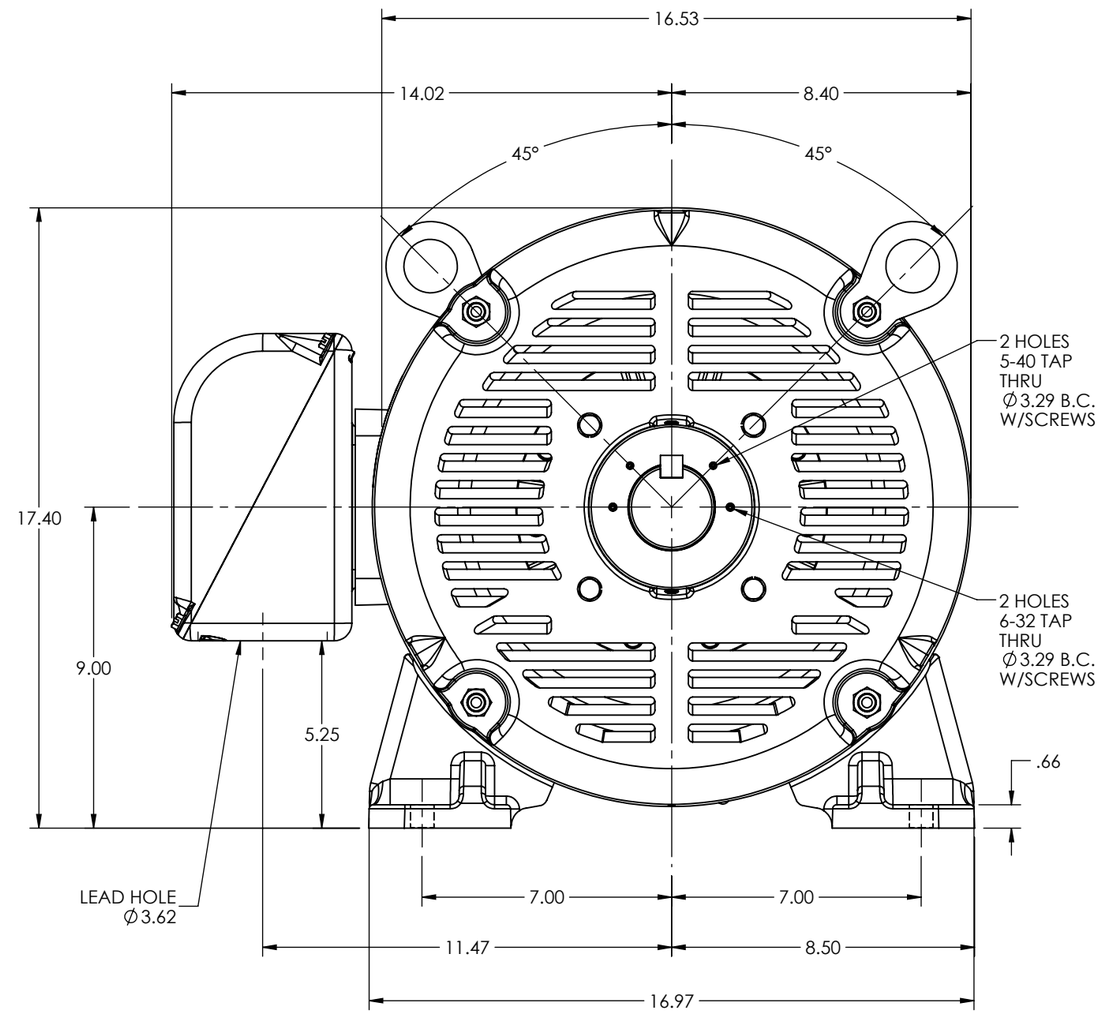

CUSTOMER IS RESPONSIBLE FOR DETERMINING THAT BALDOR'S PRODUCT WILL PERFORM SUITABLY IN THE INTENDED APPLICATION

REV. DESC: ADD 6-32 TAP HOLE CALLOUT			
REV: C	VERSION: 03	REVISED: 11:40:56 04/10/2024	TDR: 000001227383
MODEL NO. 44LYE125			REF: -
BY: ENSTEK0			B

BALDOR

HORZ OPSB 364-5T HVAC MTR W/GRS PLUGS, DUAL SH GND MTG

44LYE125