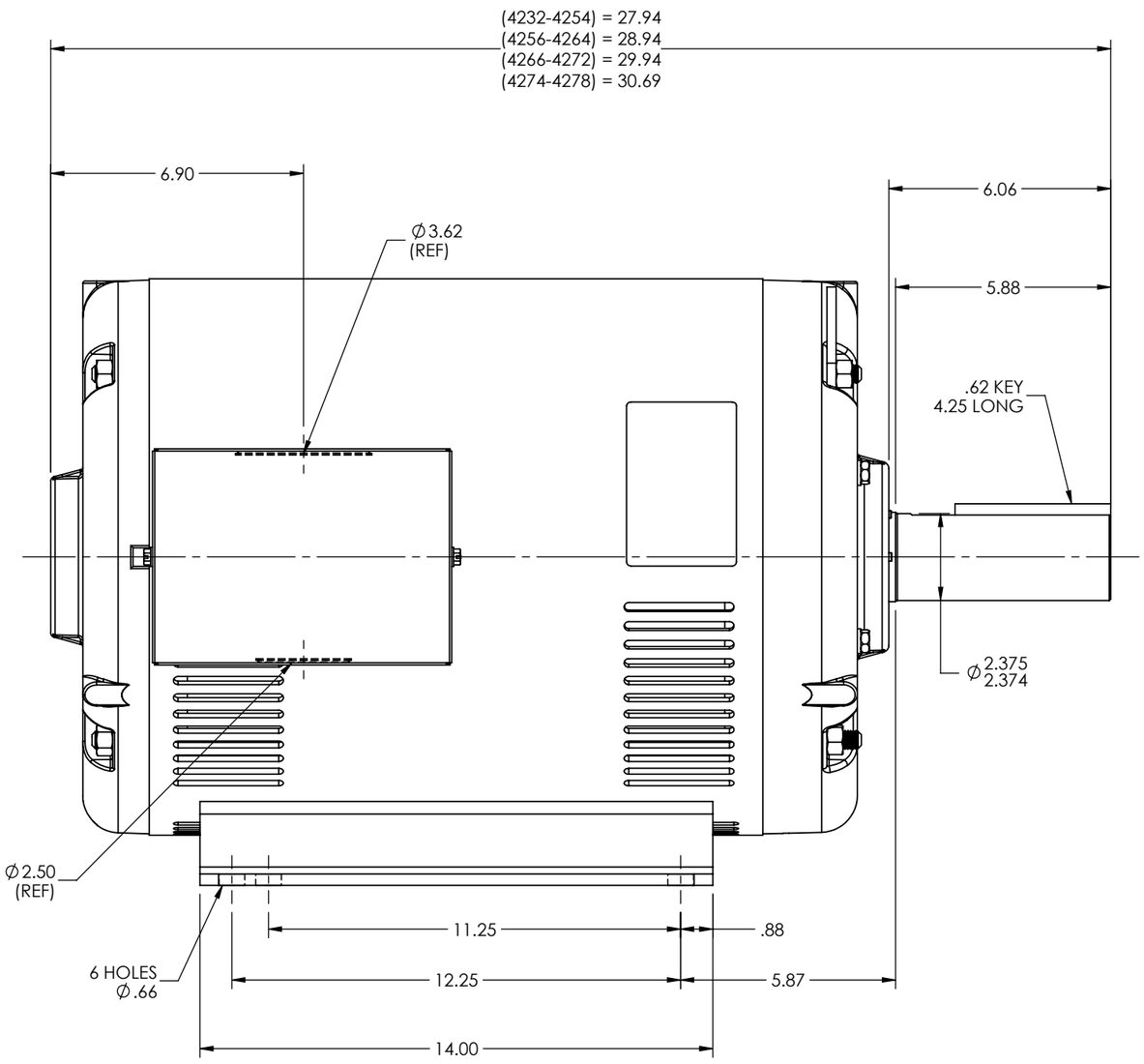

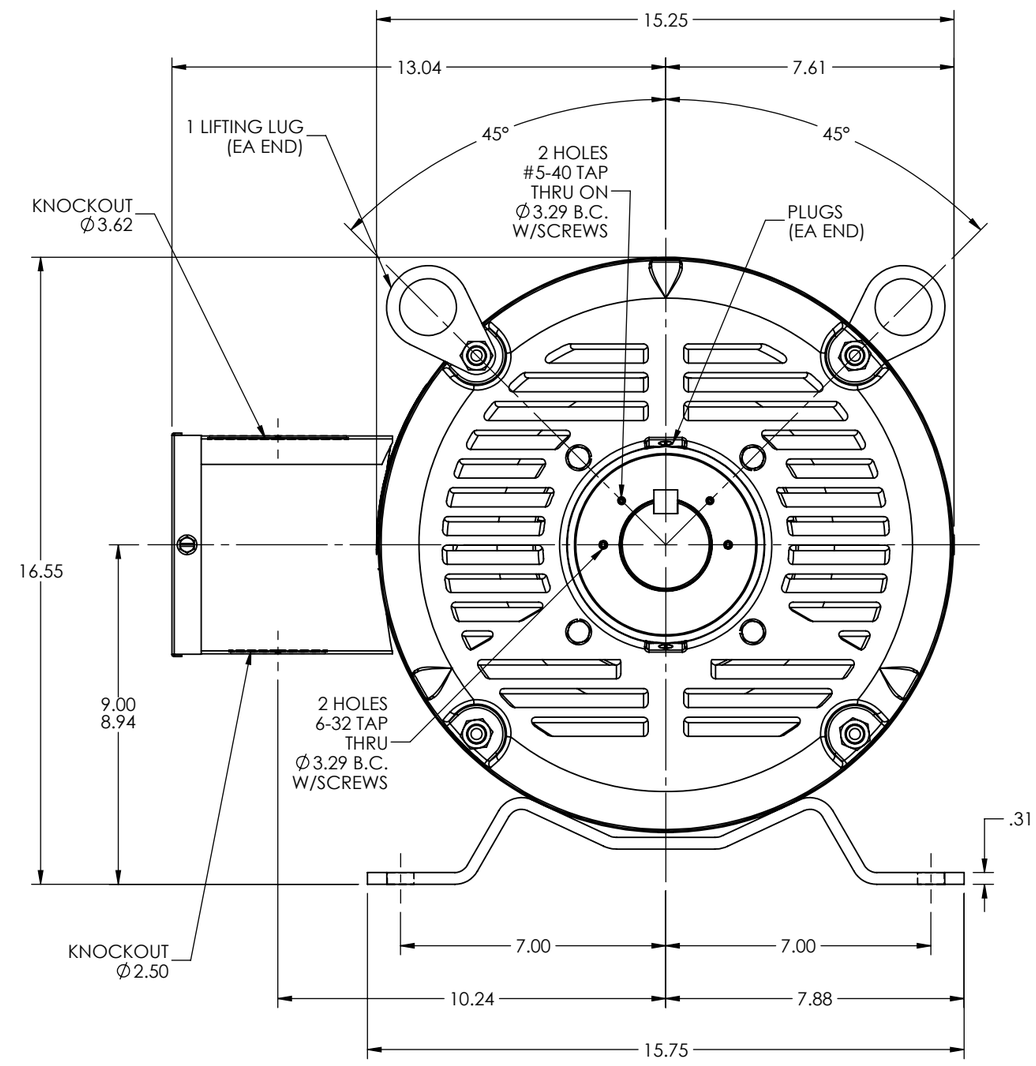

42LYH067

CUSTOMER IS RESPONSIBLE FOR DETERMINING THAT BALDOR'S PRODUCT WILL PERFORM SUITABLY IN THE INTENDED APPLICATION

REV. DESC: ADD 6-32 TAP HOLE CALLOUT			
REV: E	VERSION: 04	REVISED: 10:15:28 04/10/2024	TDR: 000001227383
MODEL NO. 42LYH067			REF: -
BY: ENSTEK0			B

BALDOR

HORZ OPSB 364-5T (HVAC MOTOR) W/DUAL SH GND MTG

42LYH067