ABB BALDOR RELIANCE

Customer information packet

EFM4312T

50HP, 1185RPM, 3PH, 60HZ, 365T, A3668M, TEFC, F
Class - None
Division - Not Applicable

Copyright © All product information within this document is subject to ABB Motors and Mechanical Inc. copyright © protection, unless otherwise noted.
9/7/2026 9:56:13 AM

Specifications

Enclosure	TEFC
Frame	365T
Frame Material	Iron
Frequency	60.00 Hz
Haz Area Class and Group	None
Haz Area Division	Not Applicable
Motor Letter Type	Three Phase
Output @ Frequency	50.000 HP @ 60 HZ
Phase	3
Synchronous Speed @ Frequency	1200 RPM @ 60 HZ
Voltage @ Frequency	230.0 V @ 60 HZ
	460.0 V @ 60 HZ
Agency Approvals	CURUSEEV
	NEMA PREMIUM
Ambient Temperature	40 °C
Auxiliary Box	NO AUXILLARY BOX
Base Indicator	Rigid
Bearing Grease Type	Polyrex EM (-20F +300F)
Current @ Voltage	124.000 A @ 230.0 V
	132.000 A @ 208.0 V
	62.000 A @ 460.0 V
Design Code	B
Drip Cover	No Drip Cover
Duty Rating	CONT
Efficiency @ 100% Load	94.1 %
Feedback Device	NO FEEDBACK
Heater Indicator	No Heater
High Voltage Full Load Amps	62.0 a
Insulation Class	F
Inverter Code	Inverter Ready
KVA Code	G
Lifting Lugs	Standard Lifting Lugs

Part Detail

Revision	J
Type	AC
Mech. spec.	
Base	
Status	PRD/A
Elec. spec.	A36WG4262
Layout	617428-078
Eff. date	07-08-2024
CD Diagram	416820-002
Poles	06
Leads	3#4,6#6
Proprietary	False
Created date	09-30-2022

Max Speed	1800 rpm
Motor Lead Quantity/Wire Size	3 @ 4 AWG
Motor Standards	NEMA
Motor Type	A3668M
Mounting Arrangement	F2
Number of Poles	6
Overall Length	33.49 IN
Power Factor	81
Product Family	General Industrial
Pulley End Bearing Type	Ball
Pulley Face Code	Standard
Service Factor	1.15
Shaft Diameter	2.375 IN
Shaft Ground Indicator	No Shaft Grounding
Shaft Rotation	Reversible
Shaft Slinger Indicator	No Slinger
Speed	1185 rpm
Speed Code	Single Speed
Starting Method	Direct on line
Thermal Device - Bearing	None
Thermal Device - Winding	None

Nameplate

NP3979LUA

CAT #	EFM4312T			**SER**				**CC**	010A						
SPEC	A36-8069-4262			**RATING**	40C AMB-CONT										
HZ	**VOLTS**		**AMPS**	**RPM**	**HP**	**CODE**	**SF**	**DES**	**PF**		**NEMA NOM. EFF**				
60	230		124/62	1185	50	G	1.15	B	81	%	94.1	%			
	-									%		%			
PH	3	**CL**	F	**MAX CORR KVAR**	15.8										
BRG	**DE**	6313	**ODE**	6313	**ENCL**	TEFC	**FR**	365T		54					
GREASE	POLYREX EM						**MTR WT**	908	**LBS**						
USABLE AT	50HZ 40HP 190/380V 120/60A					SF1.0									
INVERTER DUTY	**CT**	15-60	**HZ**	4:1	**VT**	3-60	**HZ**	20:1	**CHP**	60-90	**HZ**	1.5:1	**1.0 SF VPWM**		
MAX RPM	1800	SFA 142/71													

S/O	FRAME	HP	TYPE	PHASE/ HERTZ	RPM	VOLTS
	365HP	50	P	3/60	1185	230/460

AMPS	DUTY	AMB °C/ INSUL	S.F.	NEMA DESIGN	CODE LETTER	ENCLOSURE
124/61.9	CONT	40/F	1.15	B	G	TEFC

E/S	ROTOR	TEST S.O.	TEST DATE	STATOR RES. @25 °C OHMS (BETWEEN LINES)
-	418141089AE	---	---	.0290/.116

PERFORMANCE

LOAD	HP	AMPERES	RPM	% POWER FACTOR	% EFFICIENCY
NO LOAD	0	23.9	1200	5.00	0
1/4	12.5	28.4	1197	45.8	90.1
2/4	25.0	37.2	1194	67.2	93.6
3/4	37.5	48.7	1191	76.4	94.3
4/4	50.0	61.9	1188	80.3	94.2
5/4	62.5	76.1	1185	82.0	93.7

SPEED TORQUE

	RPM	TORQUE % FULL LOAD	TORQUE LB.-FT.	AMPERES
LOCKED ROTOR	0	165	365	375
PULL UP	540	147	325	335
BREAKDOWN	1135	253	559	200
FULL LOAD	1188	100	221	61.9

AMPERES SHOWN FOR 460 VOLT CONNECTION. IF OTHER CONNECTIONS ARE AVAILABLE, THE AMPERES WILL VARY INVERSELY WITH THE RATED VOLTAGE.

TYPICAL DATA
NEMA NOM. EFF. 94.1 PCT

ABB	DRAWN BY: C.B.ATANGANE CHECKED BY: J. P. TSAO APPROVED BY: W. L. SMITH DATE: 11/12/25	AC MOTOR PERFORMANCE DATA	A36WG4262-R001 DATE ISSUED 11/12/25

FRAME 365HP	RPM 1185	S.F. 1.15	ROTOR 418141089AE
HP 50	VOLTS 230/460	NEMA DESIGN B	TEST S.O. TYPICAL DATA
TYPE P	AMPS 124/61.9	CODE LETTER G	TEST DATE ---
PHASE / HERTZ 3/60	DUTY CONT	ENCLOSURE TEFC	STATOR RES. @ 25°C .0290/.116
	AMB °C / INSUL 40/F	E/S -	OHMS (BETWEEN LINES)

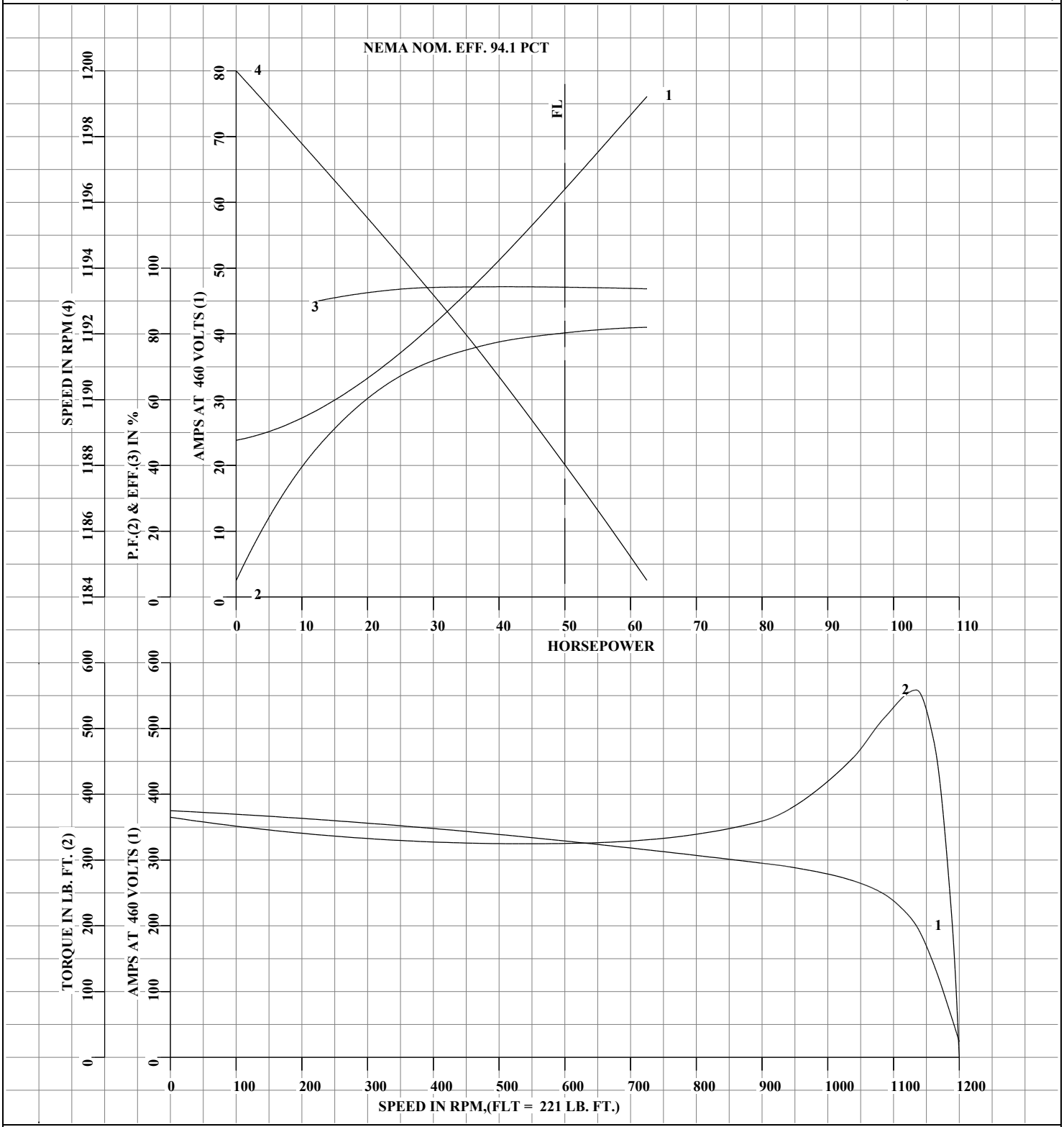

AMPERES SHOWN FOR 230/460 VOLT CONNECTION, IF OTHER VOLTAGE CONNECTIONS ARE AVAILABLE, THE AMPERES WILL VARY INVERSELY WITH THE RATED VOLTAGE.

ABB	DRAWN BY: C.B.ATANGANE CHECKED BY: J. P. TSAO APPROVED BY: W. L. SMITH DATE: 11/12/25	AC MOTOR PERFORMANCE DATA	A36WG4262-R001 ISSUE DATE 11/12/25

DUTY MASTER ALTERNATING CURRENT MOTORS

617428-078

ENCLOSURE: TOTALLY ENCLOSED

SQUIRREL-CAGE INDUCTION

MOUNTING: FOOT/F2

CAST IRON CONSTRUCTION

COOLING: FAN COOLED

FRAMES E364T/E365T

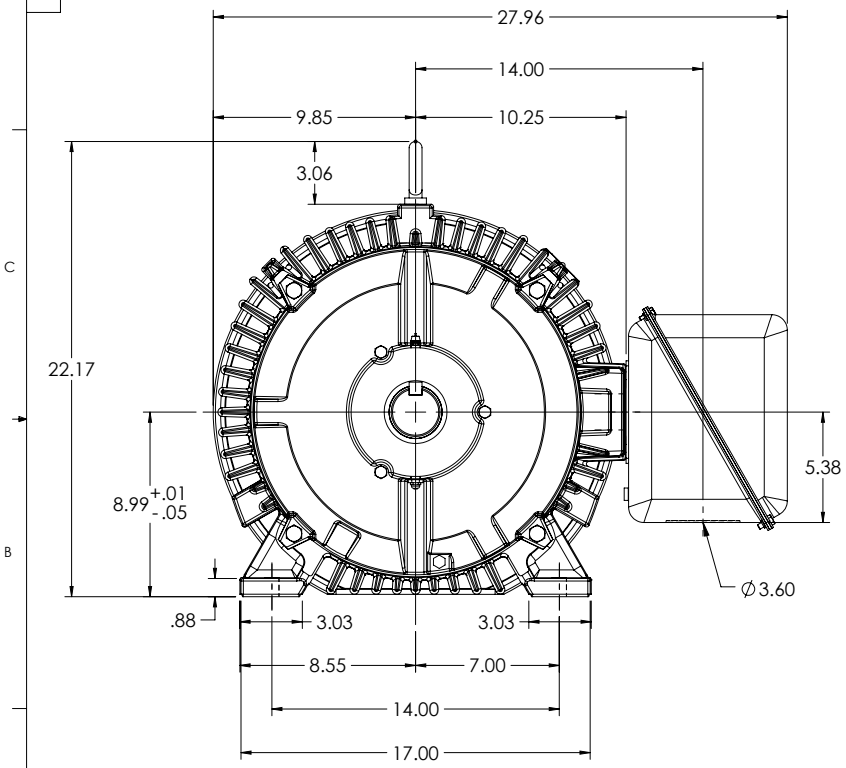

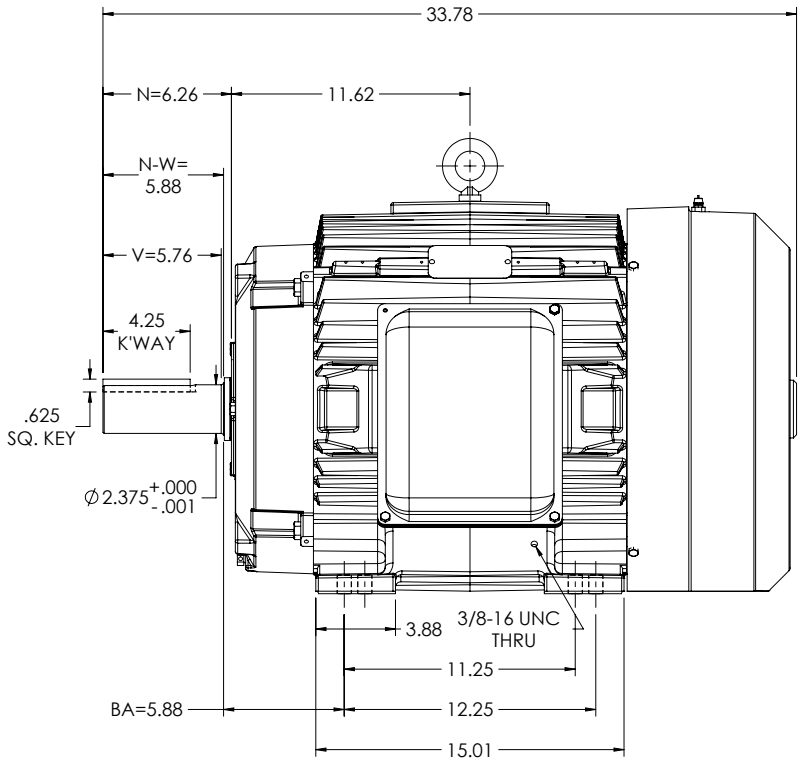

WEIGHT (LBS): 840, MOTOR WEIGHTS MAY VARY BY 15% DEPENDING UPON RATING.
MAXIMUM PERMISSIBLE SHAFT RUNOUT WHEN MEASURED AT END OF STD. SHAFT EXTENSION IS .003 T.I.R.
CUSTOMER IS RESPONSIBLE FOR DETERMINING THAT BALDOR'S PRODUCT WILL PERFORM SUITABLY IN THE INTENDED APPLICATION.

REV. DESC: UPDATE TO MATCH CATALOG SPEC PER PROD MGM			
REV: B	VERSION: 02	REVISED: 01:16:29 08/11/2025	TDR: 000001194451
MODEL NO. 617428-078			REF:
BY: USBUFRA			B

BALDOR

E365/364T TEFC FOOT F2 STEEL CONDUIT BOX

617428-078

416820–002

A–C MOTOR
CONNECTION DIAGRAM
STANDARD 9 LEAD DELTA–CONNECTED

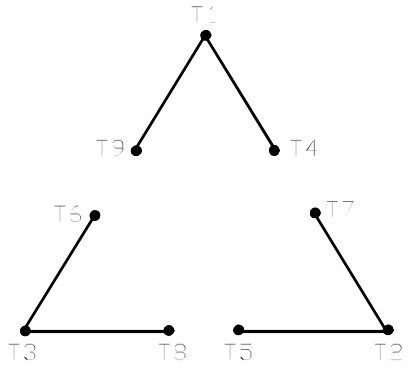

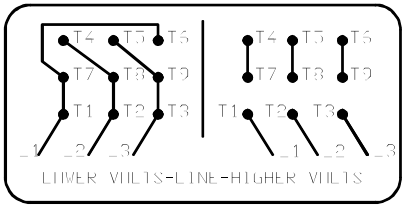

(N. P. 1575-B)

416820–002

REV. DESC: FONT CHANGE FOR PDF SEARCHABLE		
REV. LTR: A	VERSION: 01	TDR: 000001009382
FILE: \MGA\00000\661	REVISED: 02:46:19 02/13/2020	BY: MGHMTT
MTL: –		

BALDOR - RELIANCE®

CONN DIAG – STANDARD 9 LEAD, DELTA–CONNECTED

SH 1 of 1