ABB BALDOR RELIANCE

Customer information packet

ECTM4111T-5G

25HP, 1180RPM, 3PH, 60HZ, 324T, 1260M, TEFC, F1
Class - None
Division - Not Applicable

Copyright © All product information within this document is subject to ABB Motors and Mechanical Inc. copyright © protection, unless otherwise noted.
11/27/2026 2:50:42 AM

Specifications

Enclosure	TEFC
Frame	324T
Frame Material	Iron
Frequency	60.00 Hz
Haz Area Class and Group	None
Haz Area Division	Not Applicable
Motor Letter Type	Three Phase
Output @ Frequency	25.000 HP @ 60 HZ
Phase	3
Synchronous Speed @ Frequency	1200 RPM @ 60 HZ
Voltage @ Frequency	575.0 V @ 60 HZ
Agency Approvals	CSA EEV NEMA PREMIUM NEMA_PREMIUM UR
Ambient Temperature	40 °C
Auxiliary Box	NO AUXILLARY BOX
Auxiliary Box Lead Termination	None
Base Indicator	Rigid
Bearing Grease Type	Polyrex EM (-20F +300F)
Blower	None
Current @ Voltage	25.700 A @ 575.0 V
Design Code	A
Drip Cover	No Drip Cover
Duty Rating	CONT
Efficiency @ 100% Load	93.0 %
Electrically Isolated Bearing	Not Electrically Isolated
Feedback Device	NO FEEDBACK
Front Shaft Indicator	Tapped & Key
Heater Indicator	Heater Included, 115 V
High Voltage Full Load Amps	25.7 a
Insulation Class	F

Part Detail

Revision	E
Type	AC
Mech. spec.	12T112
Base	
Status	PRD/A
Elec. spec.	12WGY448
Layout	12LYT112
Eff. date	03-17-2026
CD Diagram	CD0006
Poles	06
Leads	3#10 Y
Proprietary	False
Created date	04-19-2022

Inverter Code	Inverter Ready
KVA Code	H
Lifting Lugs	Vertical Lifting Lugs
Locked Bearing Indicator	Locked Bearing
Motor Lead Quantity/Wire Size	3 @ 10 AWG
Motor Lead Termination	Flying Leads
Motor Standards	NEMA
Motor Type	1260M
Mounting Arrangement	F1
Number of Poles	6
Overall Length	30.34 IN
Power Factor	79
Product Family	Chemical Processing (Not DC)
Pulley End Bearing Type	Sealed Bearing
Pulley Face Code	Standard
Pulley Shaft Indicator	Tapped & Key
Rodent Screen	None
RoHS Status	ROHS COMPLIANT
Service Factor	1.15
Shaft Diameter	2.125 IN
Shaft Ground Indicator	Shaft Grounding
Shaft Rotation	Reversible
Shaft Slinger Indicator	Shaft Slinger
Speed	1180 rpm
Speed Code	Single Speed
Starting Method	Direct on line
Thermal Device - Bearing	None
Thermal Device - Winding	None
Vibration Sensor Indicator	No Vibration Sensor
Winding Thermal 1	None
Winding Thermal 2	None

Nameplate

NP1260									
CAT.NO.	ECTM4111T-5G								
SPEC.	12T112Y448G1								
HP	25								
VOLTS	575								
AMP	25.7								
RPM	1180								
FRAME	324T	**HZ**	60		**PH**	3			
SER.F.	1.15	**CODE**	H	**DES**	A		**CL**	F	
NEMA-NOM-EFF	93	**PF**	79						
RATING	40C AMB-CONT								
CC	010A								
DE	6312	**ODE**	6311						
ENCL	TEFC	**SN**							
	INV DUTY 20:1VT								

AC Induction Motor Performance Data
Record # 34376
Typical performance - not guaranteed values

Winding: 12WGY448-R001	**Type:** 1260M	**Enclosure:** TEFC

Nameplate Data				**575 V, 60 Hz: Single Voltage Motor**	
Rated Output (HP)			25	**Full Load Torque**	111 LB-FT
Volts			575	**Start Configuration**	direct on line
Full Load Amps			25.7	**Breakdown Torque**	314 LB-FT
R.P.M.			1180	**Pull-up Torque**	119 LB-FT
Hz	60	**Phase**	3	**Locked-rotor Torque**	174 LB-FT
NEMA Design Code	A	**KVA Code**	H	**Starting Current**	162 A
Service Factor (S.F.)			1.15	**No-load Current**	11.3 A
NEMA Nom. Eff.	93	**Power Factor**	79	**Line-line Res. @ 25ºC**	0.43 Ω
Rating - Duty			40C AMB-CONT	**Temp. Rise @ Rated Load**	46°C
S.F. Amps				**Temp. Rise @ S.F. Load**	56°C
				Locked-rotor Power Factor	28
				Rotor inertia	11.5 LB-FT2

Load Characteristics 575 V, 60 Hz, 25 HP

% of Rated Load	**25**	**50**	**75**	**100**	**125**	**150**	**S.F.**
Power Factor	42	64	74	79	81	81	80
Efficiency	87.2	91.9	92.9	93	92.5	91.2	92.6
Speed	1196	1192	1188	1184	1180	1173	1182
Line amperes	12.8	16	20.5	25.7	31.4	39.3	29.1

ABB Motors and Mechanical Inc.

WINDING # 12WGY448

25 HP 3 PH 60 HZ 1180 RPM 575 V 1260M

Typical performance - not guaranteed values.

TORQUES(LB-FT): PO=314 PU=119 LR=174 LRA=162

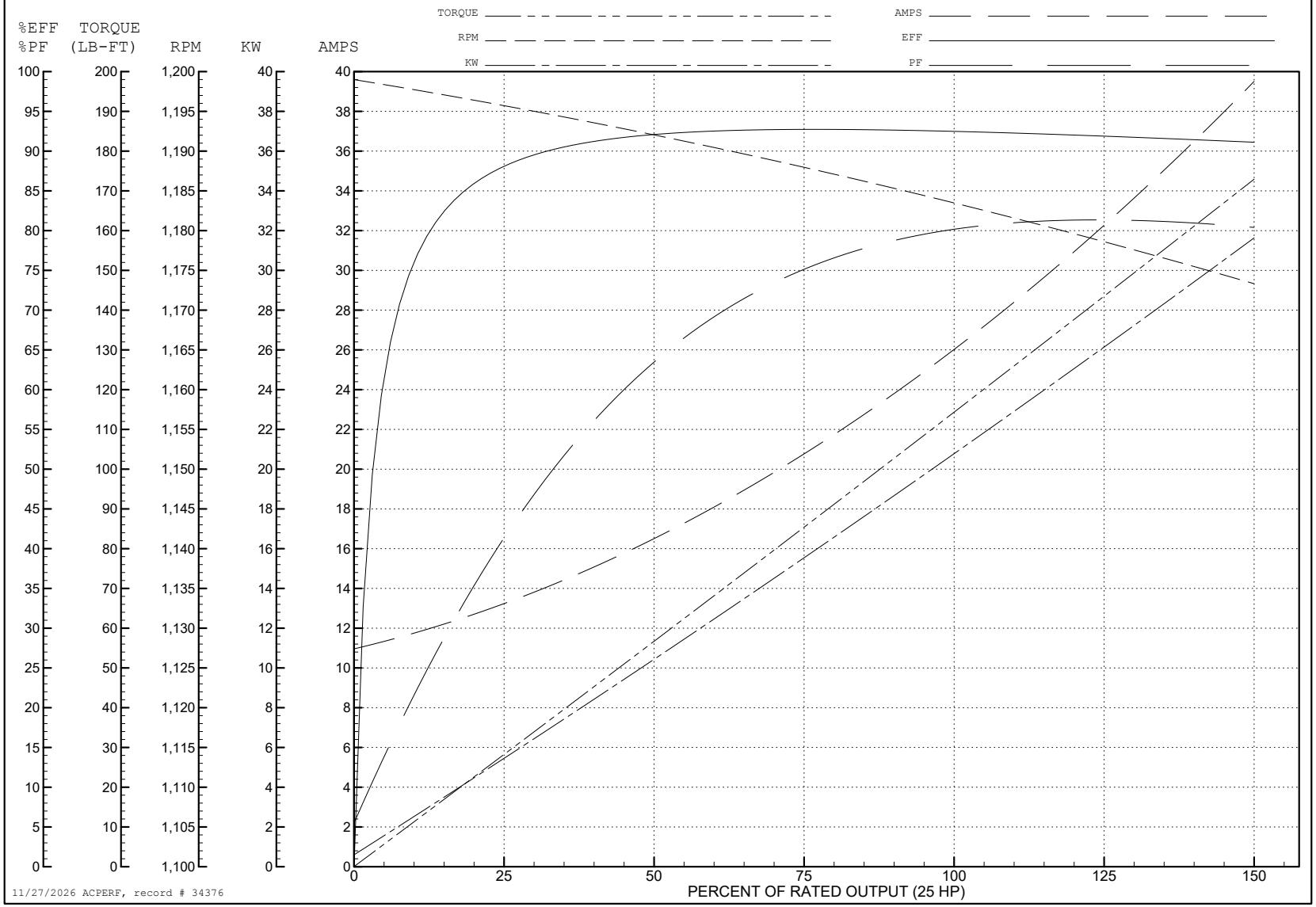

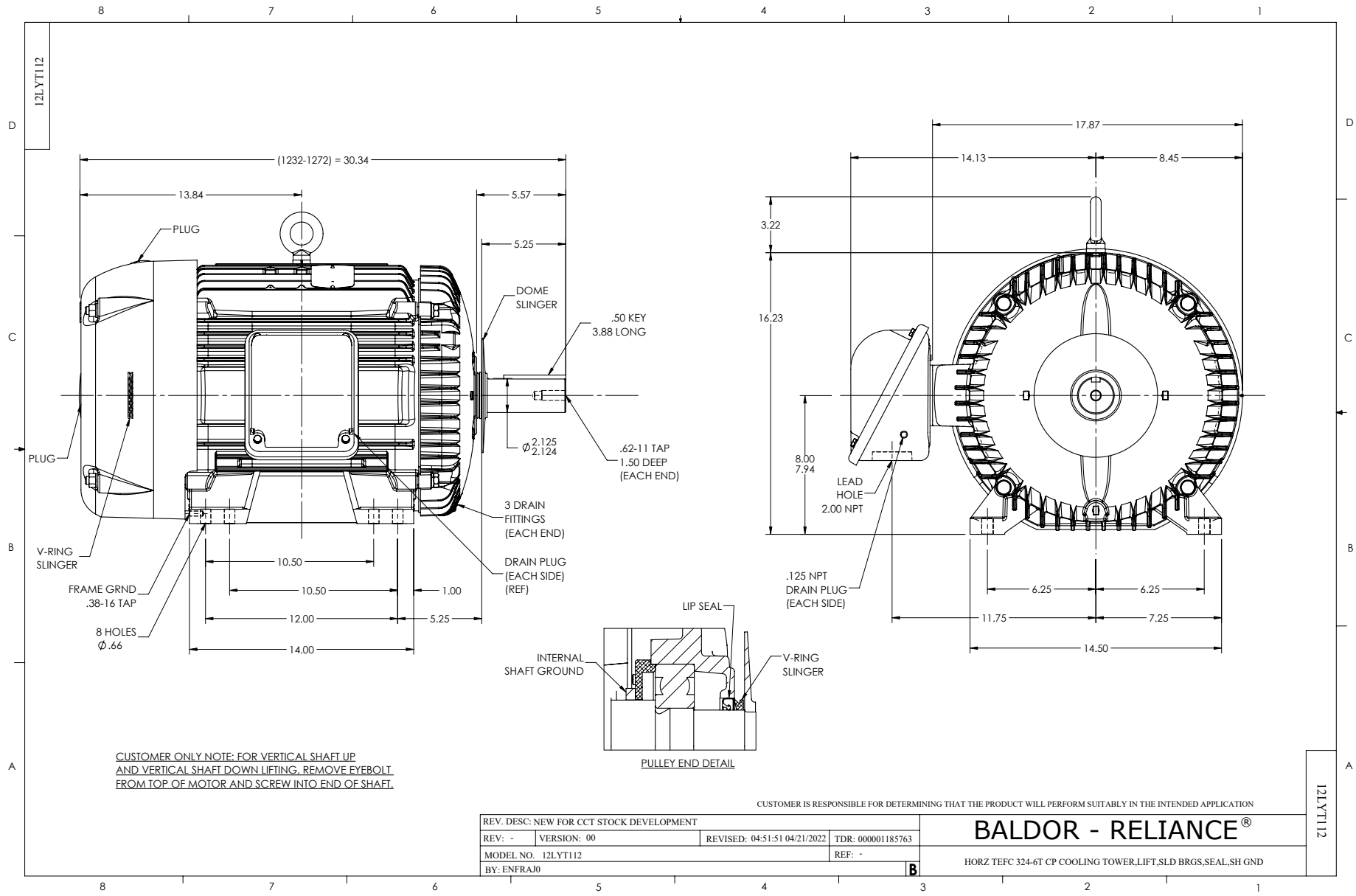
12LYT112
(1232-1272) = 30.34
13.84
5.57
5.25
PLUG
DOME SLINGER
.50 KEY
3.88 LONG
PLUG
Ø 2.125
2.124
.62-11 TAP
1.50 DEEP
(EACH END)
3 DRAIN
FITTINGS
(EACH END)
V-RING
SLINGER
DRAIN PLUG
(EACH SIDE)
(REF)
FRAME GRND
.38-16 TAP
10.50
10.50
1.00
12.00
5.25
8 HOLES
Ø .66
14.00
17.87
14.13
8.45
3.22
16.23
8.00
7.94
LEAD
HOLE
2.00 NPT
.125 NPT
DRAIN PLUG
(EACH SIDE)
6.25
6.25
11.75
7.25
14.50
LIP SEAL
INTERNAL
SHAFT GROUND
V-RING
SLINGER
PULLEY END DETAIL
CUSTOMER ONLY NOTE: FOR VERTICAL SHAFT UP
AND VERTICAL SHAFT DOWN LIFTING, REMOVE EYEBOLT
FROM TOP OF MOTOR AND SCREW INTO END OF SHAFT.
CUSTOMER IS RESPONSIBLE FOR DETERMINING THAT THE PRODUCT WILL PERFORM SUITABLY IN THE INTENDED APPLICATION
REV. DESC: NEW FOR CCT STOCK DEVELOPMENT
REV: - VERSION: 00 REVISED: 04:51:51 04/21/2022 TDR: 000001185763
MODEL NO. 12LYT112 REF: -
BY: ENFRAJ0 B
BALDOR - RELIANCE®
HORZ TEFC 324-6T CP COOLING TOWER,LIFT,SLD BRGS,SEAL,SH GND
12LYT112

CD0006

TYPICAL WYE–CONNECTED MOTOR

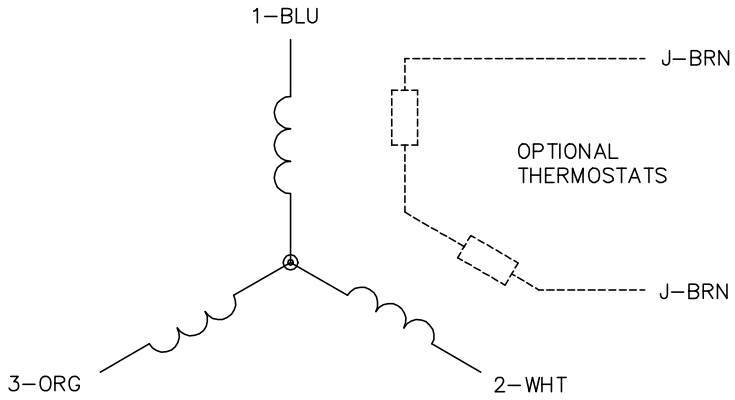

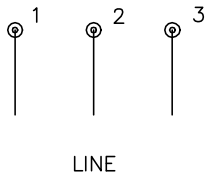

TYPICAL DELTA–CONNECTED MOTOR

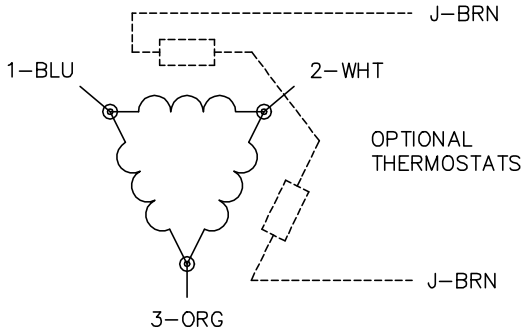

NOTES:

1. THREE LEAD MOTOR MAY BE EITHER WYE CONNECTED OR DELTA CONNECTED.
2. INTERCHANGE ANY TWO LINE LEADS TO REVERSE ROTATION.
3. OPTIONAL THERMOSTATS ARE PROVIDED WHEN SPECIFIED.
4. ACTUAL NUMBER OF INTERNAL PARALLEL CIRCUITS MAY VARY.
5. LEAD COLORS ARE OPTIONAL. LEADS MUST BE NUMBERED AS SHOWN.

CD0006

REV. DESC: ADD CLASS CONN00000007		
REV. LTR: E	VERSION: 01	TDR: 000001099922
FILE: \AAA\00005\141	REVISED: 10:24:49 02/19/2019	BY: ENBRIR0
MTL: –		

BALDOR - RELIANCE®

3PH, SV, 3 LEADS, WYE OR DELTA CONNECTED

SH 1 of 1