09LYL877

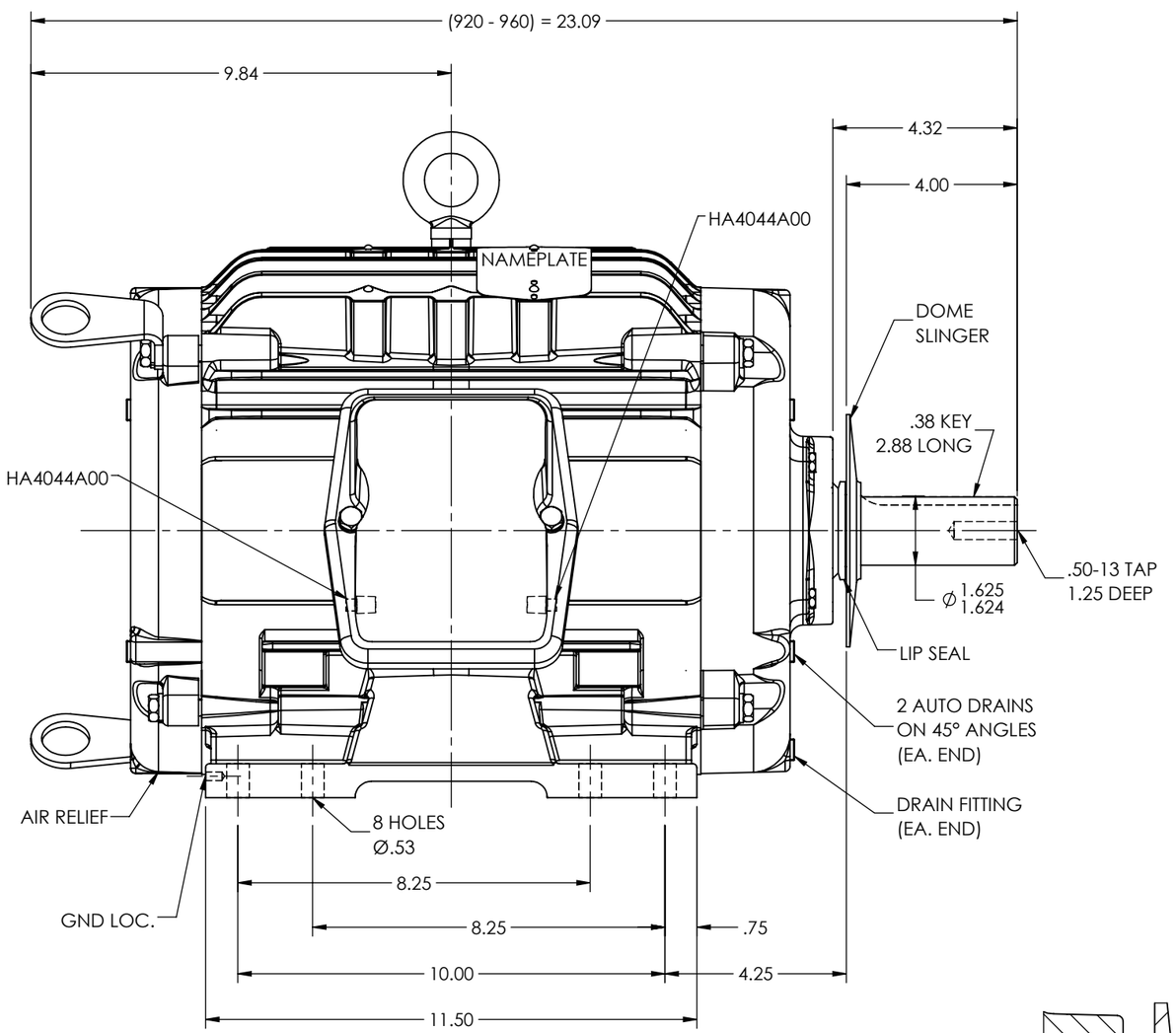


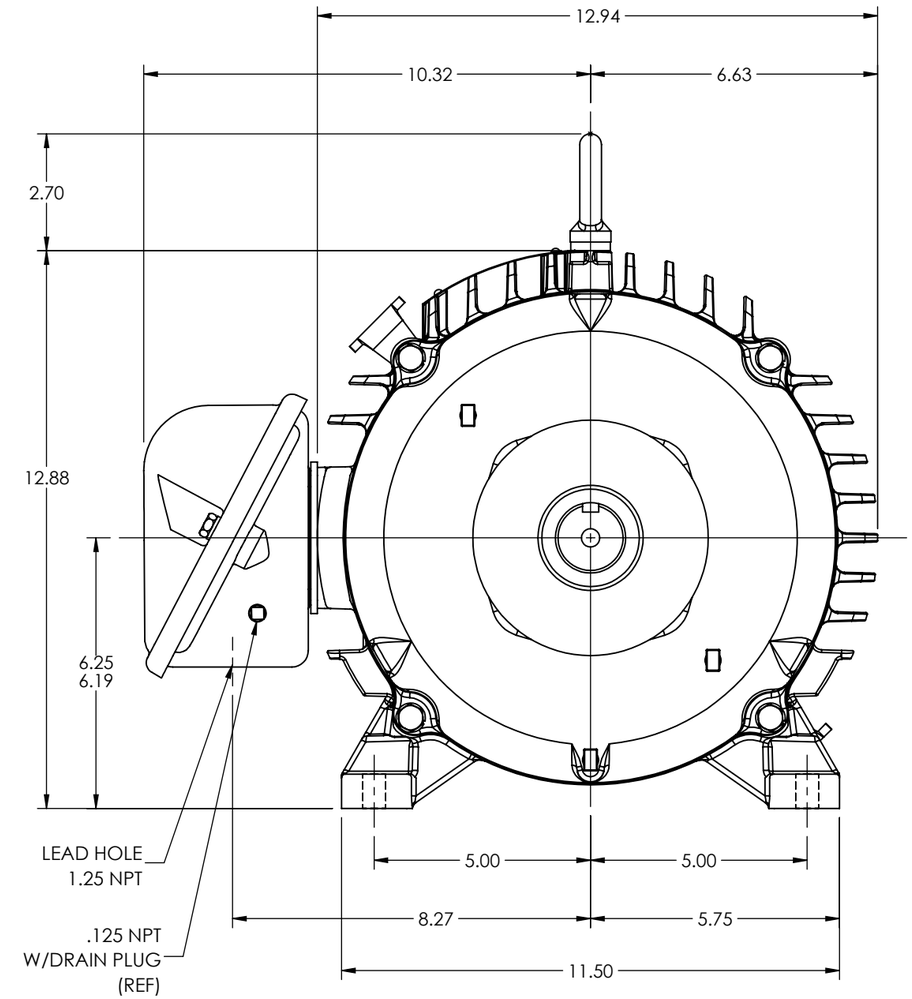


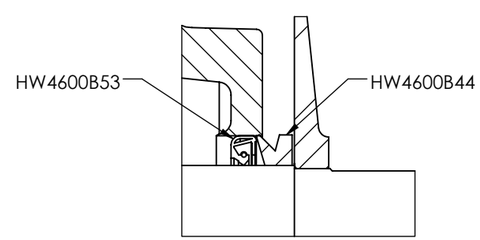


PU. END DETAIL

CUSTOMER ONLY NOTE:
FOR VERTICAL SHAFT UP LIFTING,
REMOVE EYEBOLT FROM TOP OF
MOTOR AND SCREW INTO END OF SHAFT.

CUSTOMER IS RESPONSIBLE FOR DETERMINING THAT THE PRODUCT WILL PERFORM SUITABLY IN THE INTENDED APPLICATION

| | | | |
|---|---|---|---|
| REV. DESC: CHG PLUG (AIR RELIEF) TO AIR RELIEF | | | |
| REV: F | VERSION: 06 | REVISED: 09:19:33 07/19/2023 | TDR: 000001212925 |
| MODEL NO. 09LYL877 | | | REF: - |
| BY: ENSHAB0 | | | B |

BALDOR - RELIANCE®

HOR TEAO 254-6T CP COOLING TOWER MTR,SLD BRGS,LIP,VERT LIFT

09LYL877