35LYEE438

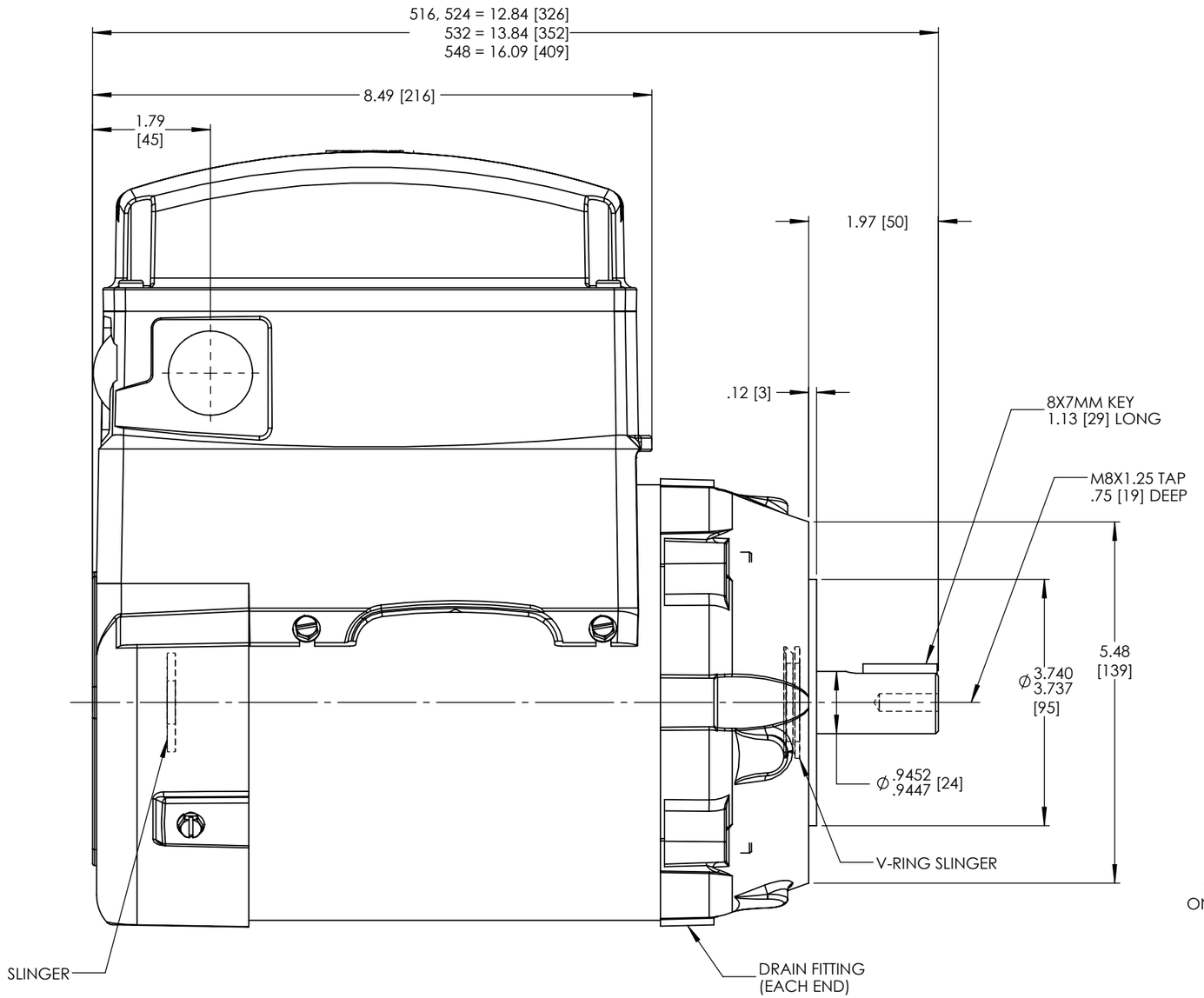

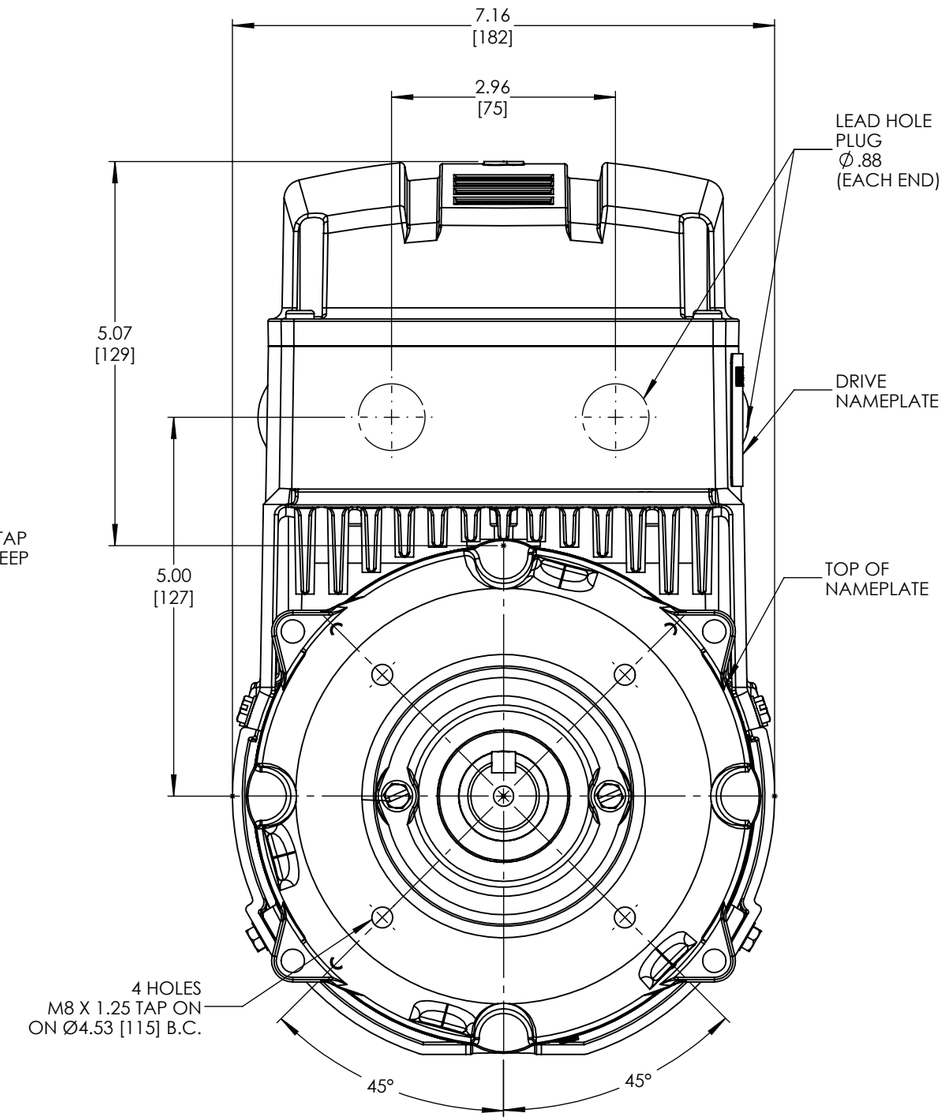

NOTE: ALTERNATE METRIC UNITS IN BRACKETS [mm].

CUSTOMER IS RESPONSIBLE FOR DETERMINING THAT THE PRODUCT WILL PERFORM SUITABLY IN THE INTENDED APPLICATION

REV. DESC: NEW TO REPLACE 35LY-000-687			
REV: -	VERSION: 00	REVISED: 04:38:55 08/15/2024	TDR: 000001227155
MODEL NO. 35LYEE438			REF: -
BY: USGRHUR			B

BALDOR - RELIANCE®

VERT D90C TEFC 35 B14,TOP MOUNT DRV,INT SH GND,ECS

35LYEE438