ABB BALDOR RELIANCE

# Customer information packet

## ECS101T3K2P2EF4

2.2KW, 1500RPM, 3PH, 50HZ, D112S, 3624B, TEFC
Class - None
Division - Not Applicable

Copyright © All product information within this document is subject to ABB Motors and Mechanical Inc. copyright © protection, unless otherwise noted.
11/25/2026 10:16:58 AM

## Specifications

| | |
|---|---|
| **Enclosure** | TEFC |
| **Frame** | D112S |
| **Frame Material** | Steel |
| **Frequency** | 50.00 Hz |
| **Haz Area Class and Group** | None |
| **Haz Area Division** | Not Applicable |
| **Motor Letter Type** | Brushless Wound Field PM Rotor |
| **Output @ Frequency** | 2.200 KW @ 50 HZ |
| **Phase** | 3 |
| **Synchronous Speed @ Frequency** | 1500 RPM @ 50 HZ |
| **Voltage @ Frequency** | 380.0 V @ 50 HZ |
| **Agency Approvals** | WEEE |
| | UKCA |
| | CULUS |
| | CE |
| | BLUETOOTH |
| **Ambient Temperature** | 40 °C |
| **Auxiliary Box** | NO AUXILLARY BOX |
| **Auxiliary Box Lead Termination** | None |
| **Base Indicator** | Rigid |
| **Bearing Grease Type** | Polyrex EM (-20F +300F) |
| **Blower** | None |
| **Constant Torque Speed Range** | 5 |
| **Current @ Voltage** | 4.400 A @ 380.0 V |
| **Drip Cover** | No Drip Cover |
| **Duty Rating** | CONT |
| **Efficiency @ 100% Load** | 91.4 % |
| **Electrically Isolated Bearing** | Not Electrically Isolated |
| **Feedback Device** | NO FEEDBACK |
| **Frame Prefix** | D |
| **Heater Indicator** | No Heater |
| **High Voltage Full Load Amps** | 4.4 a |

## Part Detail

| | |
|---|---|
| **Revision** | E |
| **Type** | AC |
| **Mech. spec.** | |
| **Base** | |
| **Status** | PRD/A |
| **Elec. spec.** | 36WGA0025 |
| **Layout** | 36LYT272 |
| **Eff. date** | 01-21-2025 |
| **CD Diagram** | CD0006B03 |
| **Poles** | 04 |
| **Leads** | 3#16 19" LONG LEADS |
| **Proprietary** | False |
| **Created date** | 02-14-2023 |

| | |
|---|---|
| **Insulation Class** | F |
| **Inverter Code** | Inverter Duty |
| **Lifting Lugs** | Standard Lifting Lugs |
| **Locked Bearing Indicator** | Locked Bearing |
| **Motor Lead Termination** | Flying Leads |
| **Motor Standards** | IEC |
| **Motor Type** | 3624B |
| **Mounting Arrangement** | B3 |
| **Number of Poles** | 4 |
| **Overall Length** | 16.34 IN |
| **Power Factor** | 96 |
| **Product Family** | General Purpose |
| **Pulley Face Code** | Standard |
| **Rodent Screen** | None |
| **Service Factor** | 1.00 |
| **Shaft Diameter** | 1.103 IN |
| **Shaft Ground Indicator** | Shaft Grounding |
| **Shaft Rotation** | Reversible |
| **Speed** | 1500 rpm |
| **Speed Code** | Single Speed |
| **Starting Method** | INVERTER SPECIAL |
| **Thermal Device - Bearing** | None |
| **Thermal Device - Winding** | None |
| **Vibration Sensor Indicator** | No Vibration Sensor |
| **Winding Thermal 1** | None |
| **Winding Thermal 2** | None |

**Nameplate**

| NP3978A01 | | | | | | | |
|---|---|---|---|---|---|---|---|
| **PART NO.** | ECIN4A5P8 | | | | | | |
| **U1** | 400 | **PH** | 3 | **HZ** | 50 | | |
| **I1** | 4.6 | **W/EXT. CHOKE** | | | 4.3 | | |
| **SERIAL #** | | | | | | | |

| NP3968B01A01 | | | | | | | |
|---|---|---|---|---|---|---|---|
| **CAT.NO.** | ECS101T3K2P2EF4 | | | | | | |
| **SPEC.** | 36-0000-3655 | | | **YR** | | | |
| **FRAME** | D112S | **IP** | 55 | **WT.** | 84 | | |
| **KW** | 2.2 | **HZ** | 50 | **PH** | 3 | **DUTY-IPM** | CONT |
| **INS CL** | F | **CLASS RISE** | | | **AMB-C** | 40 | |
| **EFF. CL** | IE5 | **EFF** | 91.9 | **COS0** | 96 | | |
| **VOLTS** | 380 | **FLA** | 4.4 | | | | |
| **1/MIN** | 1500 | | | **1/MIN MAX** | 3000 | | |
| **BEMF (V)** | 177 | | | **RS (OHMS)** | 3.68 | | |
| **LD (MH)** | 51 | | | **LQ (MH)** | 177 | | |
| **VPWM** | **CP =** | 50 | **TO** | 100 | | | |
| **CT** | 5 | **TO** | 50 | **VT** | 1 | **TO** | 100 |
| **MATCHED INV** | ECIN4A5P8 | | | | | | |
| **DE** | 6206 | **ODE** | 6205 | | | | |
| **SERIAL #** | | | | | | | |

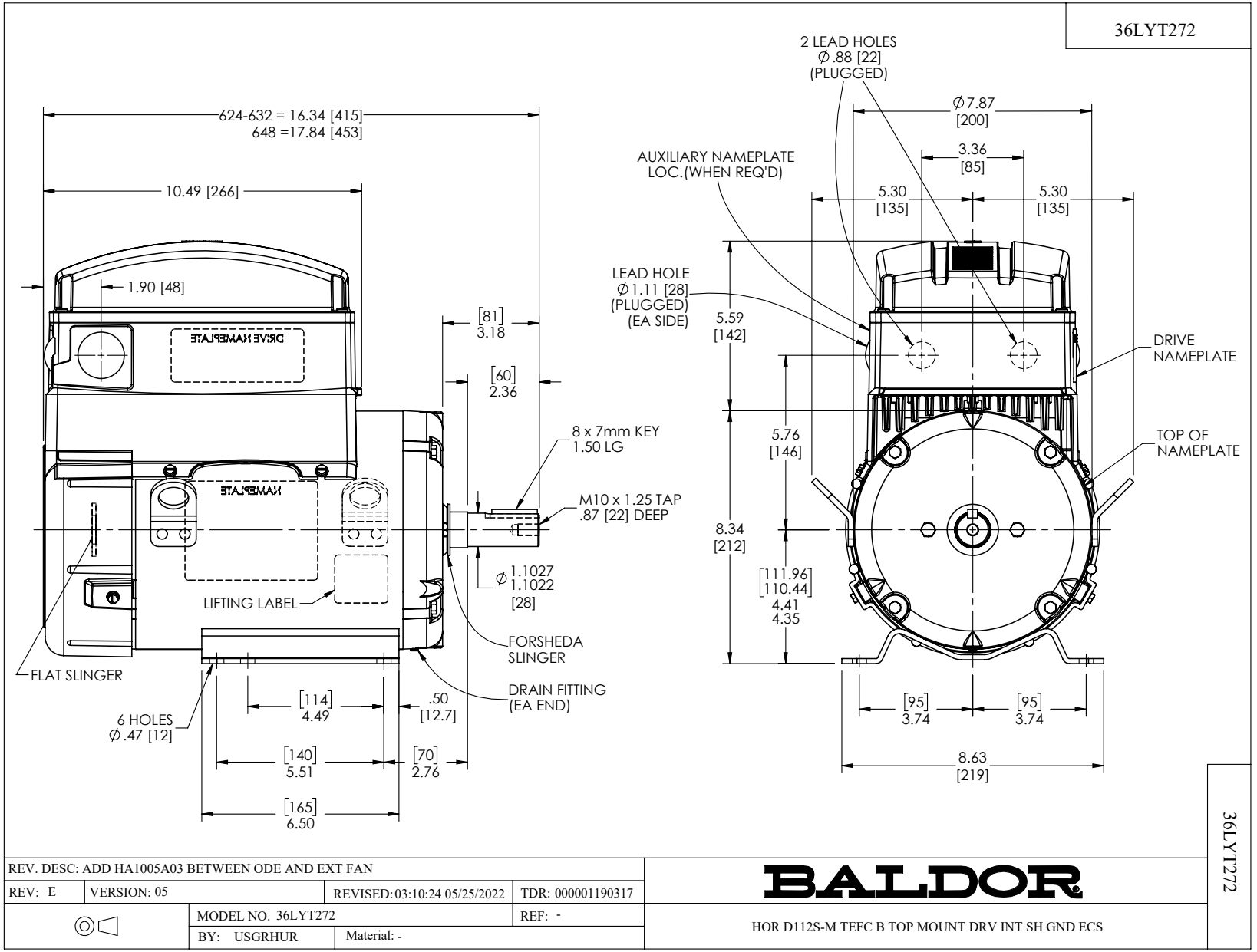
36LYT272
624-632 = 16.34 [415]
648 =17.84 [453]
10.49 [266]
1.90 [48]
DRIVE NAMEPLATE
NAMEPLATE
[81]
3.18
[60]
2.36
8 x 7mm KEY
1.50 LG
M10 x 1.25 TAP
.87 [22] DEEP
Ø 1.1027
1.1022
[28]
LIFTING LABEL
FLAT SLINGER
FORSHEDA
SLINGER
DRAIN FITTING
(EA END)
6 HOLES
Ø .47 [12]
[114]
4.49
.50
[12.7]
[140]
5.51
[70]
2.76
[165]
6.50
2 LEAD HOLES
Ø .88 [22]
(PLUGGED)
Ø 7.87
[200]
AUXILIARY NAMEPLATE
LOC.(WHEN REQ'D)
3.36
[85]
5.30
[135]
5.30
[135]
LEAD HOLE
Ø 1.11 [28]
(PLUGGED)
(EA SIDE)
5.59
[142]
DRIVE
NAMEPLATE
5.76
[146]
TOP OF
NAMEPLATE
8.34
[212]
[111.96]
[110.44]
4.41
4.35
[95]
3.74
[95]
3.74
8.63
[219]
REV. DESC: ADD HA1005A03 BETWEEN ODE AND EXT FAN
REV: E
VERSION: 05
REVISED: 03:10:24 05/25/2022
TDR: 000001190317
MODEL NO. 36LYT272
REF: -
BY: USGRHUR
Material: -
BALDOR
HOR D112S-M TEFC B TOP MOUNT DRV INT SH GND ECS
36LYT272

36CB3503A00

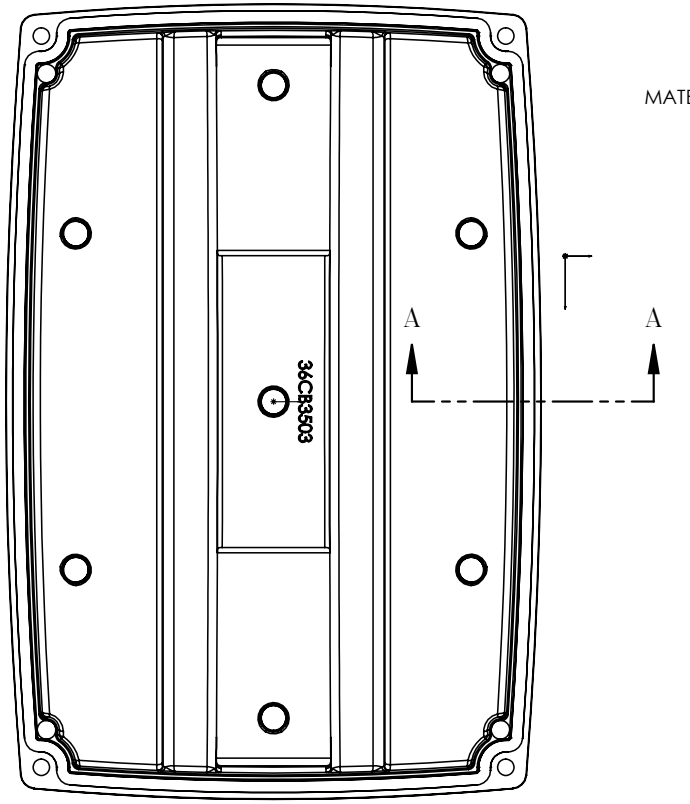


MATERIAL: RAMPF, RAKU-PUR 32-3280-51L

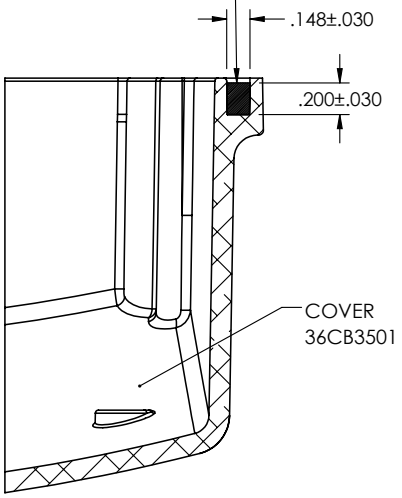


SECTION A–A

36CB3503A00

| | | | |
|---|---|---|---|
| REV. DESC: NEW | | | |
| REV: - | VERSION: 00 | REVISED: 09:13:16 01/15/2020 | TDR: 000001129989 |
| | MODEL NO. 36CB3503A00 | | REF: - |
| | BY: ENMARS0 | Material: - | |

BALDOR - RELIANCE®

36 & 37 FRAME TOP ECM ALUMINUM COVER WITH FOAM SEAL

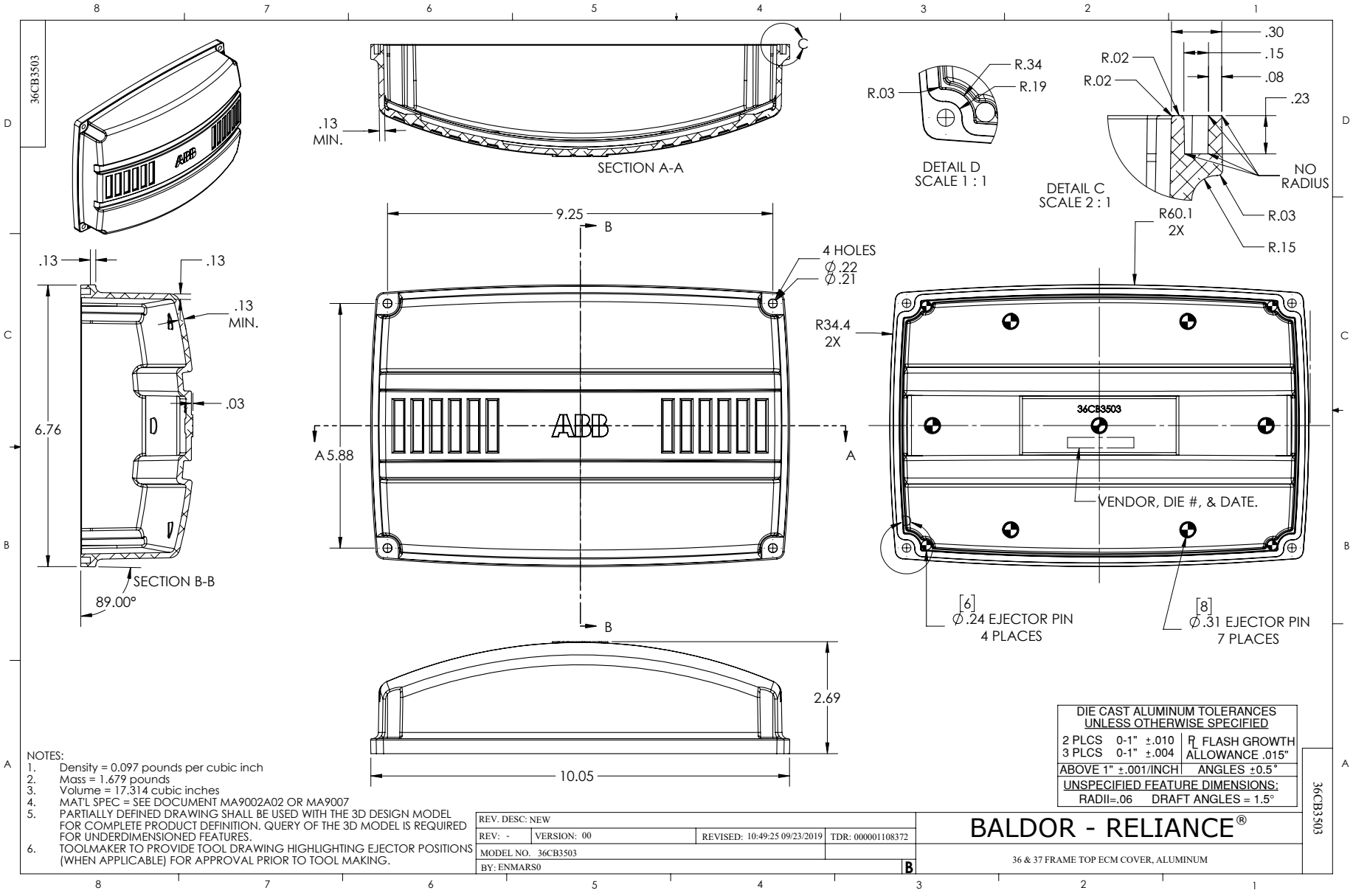


NOTES:
1. Density = 0.097 pounds per cubic inch
2. Mass = 1.679 pounds
3. Volume = 17.314 cubic inches
4. MAT'L SPEC = SEE DOCUMENT MA9002A02 OR MA9007
5. PARTIALLY DEFINED DRAWING SHALL BE USED WITH THE 3D DESIGN MODEL FOR COMPLETE PRODUCT DEFINITION. QUERY OF THE 3D MODEL IS REQUIRED FOR UNDERDIMENSIONED FEATURES.
6. TOOLMAKER TO PROVIDE TOOL DRAWING HIGHLIGHTING EJECTOR POSITIONS (WHEN APPLICABLE) FOR APPROVAL PRIOR TO TOOL MAKING.

| DIE CAST ALUMINUM TOLERANCES UNLESS OTHERWISE SPECIFIED | |
|---|---|
| 2 PLCS 0-1" ±.010<br>3 PLCS 0-1" ±.004 | R FLASH GROWTH ALLOWANCE .015" |
| ABOVE 1" ±.001/INCH | ANGLES ±0.5° |
| UNSPECIFIED FEATURE DIMENSIONS: RADII=.06 DRAFT ANGLES = 1.5° | |

| | | | |
|---|---|---|---|
| REV. DESC: NEW | | | |
| REV: - | VERSION: 00 | REVISED: 10:49:25 09/23/2019 | TDR: 000001108372 |
| MODEL NO. 36CB3503 | | | |
| BY: ENMARS0 | | | B |

BALDOR - RELIANCE®

36 & 37 FRAME TOP ECM COVER, ALUMINUM

36CB3503

CD0006B03

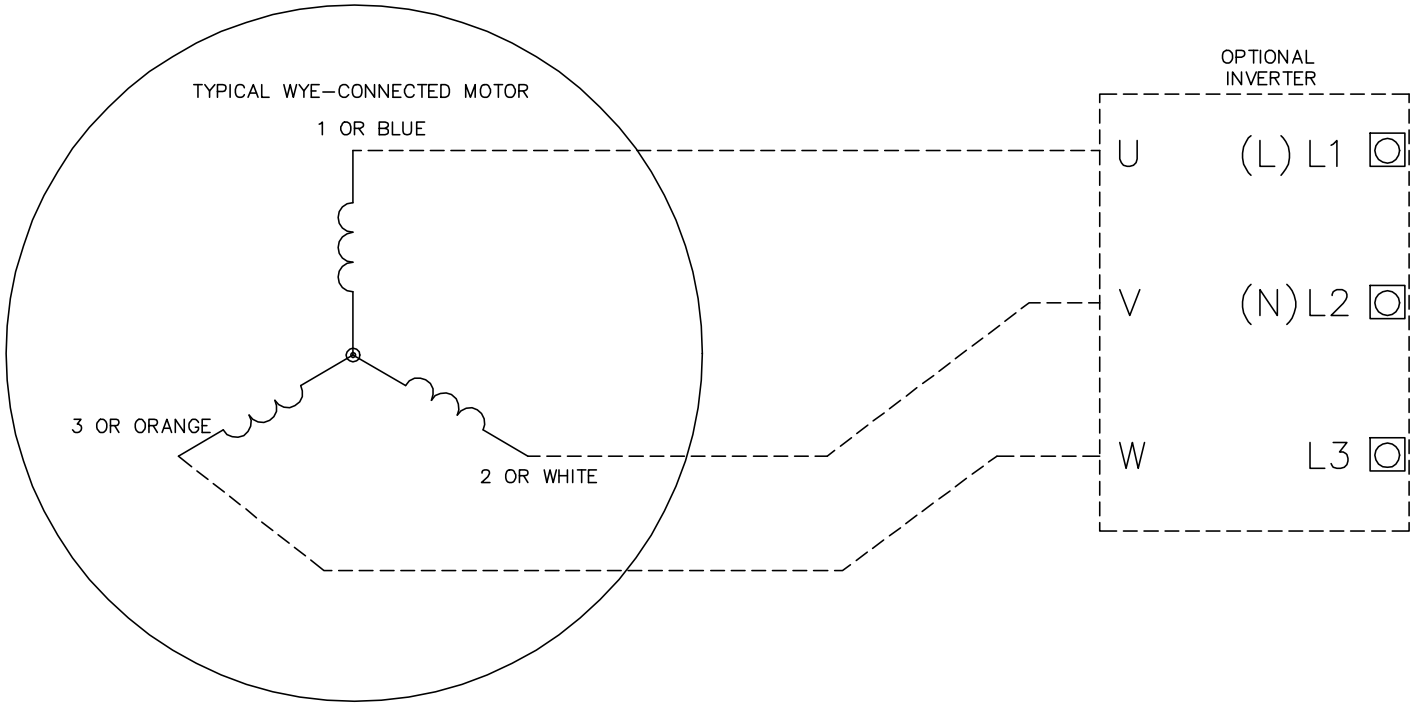


NOTES:

1. INTERCHANGE ANY TWO LINE LEADS TO REVERSE ROTATION.
2. ACTUAL NUMBER OF INTERNAL PARALLEL CIRCUITS MAY VARY.

CD0006B03

| | | |
|---|---|---|
| REV. DESC: CHANGE LEAD COLORS TO BLUE WHITE ORANGE | | |
| REV. LTR: A | VERSION: 01 | TDR: 000001158598 |
| FILE: \AAA\00252\917 | REVISED: 11:01:03 01/19/2021 | BY: ENMARSO |
| MTL: – | | |

BALDOR - RELIANCE®

3PH, SV, 3 LEADS, WYE CONNECTED, ECS

SH 1 of 1