ABB BALDOR RELIANCE

Customer information packet

ECS101M0H5DB4

5HP, 1800RPM, 3PH, 60HZ, 145TC, 3548B, TEFC, F1
Class - None
Division - Not Applicable

Copyright © All product information within this document is subject to ABB Motors and Mechanical Inc. copyright © protection, unless otherwise noted.
11/25/2026 10:46:07 AM

Specifications

Enclosure	TEFC
Frame	145TC
Frame Material	Steel
Frequency	60.00 Hz
Haz Area Class and Group	None
Haz Area Division	Not Applicable
Motor Letter Type	Brushless Wound Field PM Rotor
Output @ Frequency	5.000 HP @ 60 HZ
Phase	3
Synchronous Speed @ Frequency	1800 RPM @ 60 HZ
Voltage @ Frequency	230.0 V @ 60 HZ
	460.0 V @ 60 HZ
Agency Approvals	WEEE
	CULUS
Ambient Temperature	40 °C
Auxiliary Box	NO AUXILLARY BOX
Auxiliary Box Lead Termination	None
Base Indicator	Rigid
Bearing Grease Type	Polyrex EM (-20F +300F)
Blower	None
Constant Torque Speed Range	6
Current @ Voltage	10.400 A @ 230.0 V
	5.200 A @ 460.0 V
Design Code	-
Drip Cover	No Drip Cover
Duty Rating	CONT
Efficiency @ 100% Load	93.0 %
Electrically Isolated Bearing	Not Electrically Isolated
Feedback Device	NO FEEDBACK
Heater Indicator	No Heater
High Voltage Full Load Amps	5.2 a
Insulation Class	H

Part Detail

Revision	C
Type	AC
Mech. spec.	35E5263
Base	
Status	PRD/A
Elec. spec.	35WGG930
Layout	35LYE5263
Eff. date	02-12-2026
CD Diagram	CD0005A25
Poles	04
Leads	9#14
Proprietary	False
Created date	03-15-2024

Inverter Code	Inverter Duty
KVA Code	-
Lifting Lugs	No Lifting Lugs
Locked Bearing Indicator	Locked Bearing
Motor Lead Quantity/Wire Size	9 @ 14 AWG
Motor Lead Termination	Flying Leads
Motor Standards	NEMA
Motor Type	3548B
Mounting Arrangement	F1
Number of Poles	4
Overall Length	15.54 IN
Power Factor	97
Product Family	General Purpose
Pulley Face Code	C-Face
Rodent Screen	None
RoHS Status	Y
Service Factor	1.15
Shaft Diameter	0.875 IN
Shaft Ground Indicator	Shaft Grounding
Shaft Rotation	Reversible
Speed	1800 rpm
Speed Code	Single Speed
Starting Method	Direct on line
Thermal Device - Bearing	None
Thermal Device - Winding	None
Vibration Sensor Indicator	No Vibration Sensor
Winding Thermal 1	None
Winding Thermal 2	None

Nameplate

NP3968A01A01											
CAT.NO.	ECS101M0H5DB4										
SPEC.	35E5263G930										
FRAME	145TC			**ENCL.**	TEFC		**IP**	54			
HP	5		40	**C AMB**		CONT					
NOM. EFF.	93	**PF**	97		**SF**	1.4					
VOLTS	230/460			**FLA**	10.4/5.2						
RPM	1800			**RPM-MAX**	4000						
HZ	60		**PH.**	3	**CLASS**	H					
BEMF (V)	113/227				**RS (OHMS)**	0.79/3.18					
LD (MH)	4.2/16.8				**LQ (MH)**	18.5/74					
VPWM	**CHP**	60	**TO**	133							
CT	6	**TO**	60	**VT**	6	**TO**	60				
MATCHED INV	ACS380-04XX-12A2-1 / 07A2-4										
DE	6205			**ODE**	6203						
SERIAL #											

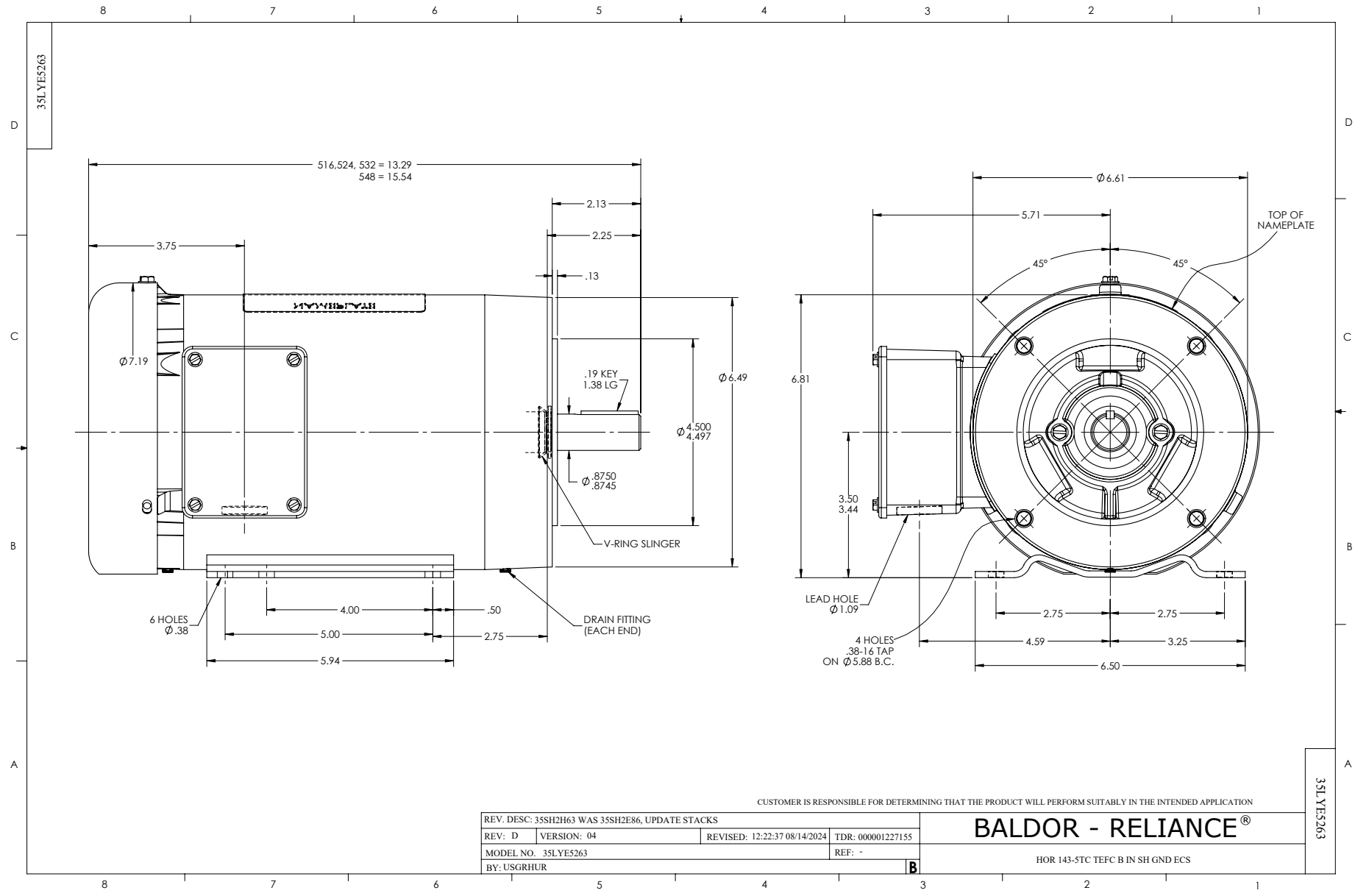
35LYE5263
516,524, 532 = 13.29
548 = 15.54
2.13
2.25
.13
3.75
Ø7.19
.19 KEY
1.38 LG
Ø6.49
Ø4.500
4.497
Ø.8750
.8745
V-RING SLINGER
6 HOLES
Ø.38
4.00
.50
5.00
2.75
5.94
DRAIN FITTING
(EACH END)
Ø6.61
5.71
TOP OF
NAMEPLATE
45°
45°
6.81
3.50
3.44
LEAD HOLE
Ø1.09
4 HOLES
.38-16 TAP
ON Ø5.88 B.C.
2.75
2.75
4.59
3.25
6.50
CUSTOMER IS RESPONSIBLE FOR DETERMINING THAT THE PRODUCT WILL PERFORM SUITABLY IN THE INTENDED APPLICATION
REV. DESC: 35SH2H63 WAS 35SH2E86, UPDATE STACKS
REV: D
VERSION: 04
REVISED: 12:22:37 08/14/2024
TDR: 000001227155
MODEL NO. 35LYE5263
REF: -
BY: USGRHUR
B
BALDOR - RELIANCE®
HOR 143-5TC TEFC B IN SH GND ECS
35LYE5263

CD0005A25

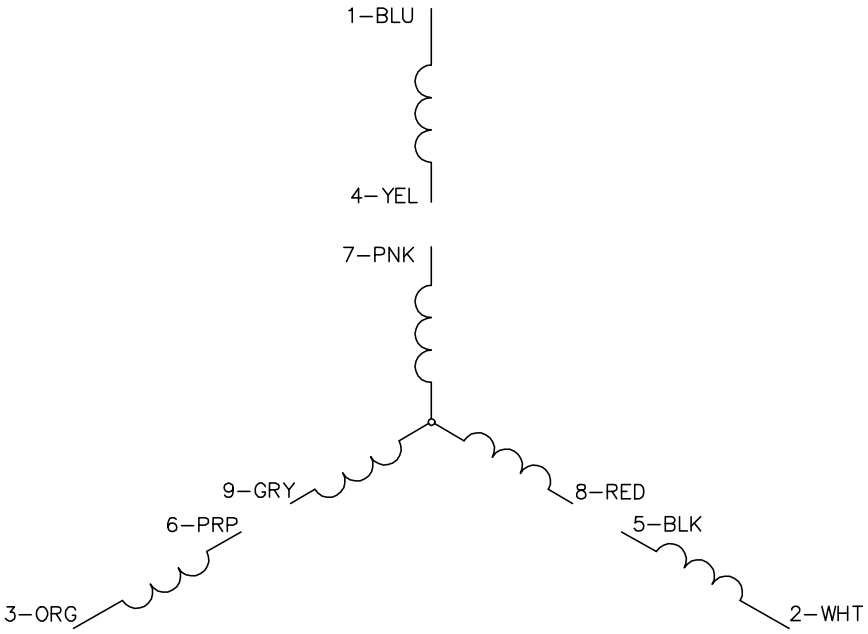

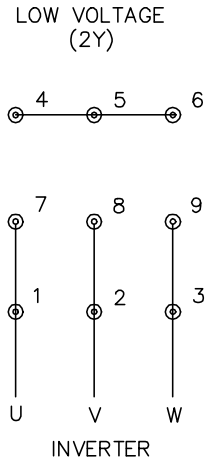

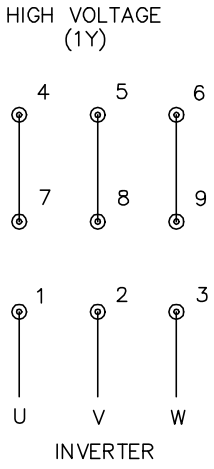

NOTES:

1. INTERCHANGE ANY TWO LINE LEADS TO REVERSE ROTATION.
2. ACTUAL NUMBER OF INTERNAL PARALLEL CIRCUITS MAY BE A MULTIPLE OF THOSE SHOWN ABOVE.
3. LEAD COLORS ARE OPTIONAL. LEADS MUST ALWAYS BE NUMBERED AS SHOWN.

CD0005A25

REV. DESC: NEW		
REV. LTR: –	VERSION: 00	TDR: 000001135746
FILE: \AAA\00253\082	REVISED: 01:10:57 03/30/2020	BY: ENMARSO
MTL: –		

BALDOR - RELIANCE®

3PH, DV, 9 LEADS, ECS

SH 1 of 1