ABB BALDOR RELIANCE

Customer information packet

ECS101A8H2DF4

2HP, 1800RPM, 3PH, 60HZ, 145T, 3524B, TEFC, F1
Class - None
Division - Not Applicable

Copyright © All product information within this document is subject to ABB Motors and Mechanical Inc. copyright © protection, unless otherwise noted.
11/25/2026 11:14:13 AM

Specifications

Enclosure	TEFC
Frame	145T
Frame Material	Steel
Frequency	60.00 Hz
Haz Area Class and Group	None
Haz Area Division	Not Applicable
Motor Letter Type	Brushless Wound Field PM Rotor
Output @ Frequency	2.000 HP @ 60 HZ
Phase	3
Synchronous Speed @ Frequency	1800 RPM @ 60 HZ
Voltage @ Frequency	230.0 V @ 60 HZ
Agency Approvals	WEEE
	CULUS
Ambient Temperature	40 °C
Auxiliary Box	NO AUXILLARY BOX
Auxiliary Box Lead Termination	None
Base Indicator	Rigid
Bearing Grease Type	Polyrex EM (-20F +300F)
Blower	None
Constant Torque Speed Range	6
Current @ Voltage	4.800 A @ 230.0 V
Design Code	-
Drip Cover	No Drip Cover
Duty Rating	CONT
Efficiency @ 100% Load	91.3 %
Electrically Isolated Bearing	Not Electrically Isolated
Feedback Device	NO FEEDBACK
Heater Indicator	No Heater
High Voltage Full Load Amps	4.8 a
Insulation Class	F
Inverter Code	03
KVA Code	-

Part Detail

Revision	J
Type	AC
Mech. spec.	35E5247
Base	
Status	PRD/A
Elec. spec.	35WGG964
Layout	35LYE5247
Eff. date	07-27-2026
CD Diagram	CD0006B03
Poles	04
Leads	3#16 13" LONG LEADS Y
Proprietary	False
Created date	04-25-2024

Lifting Lugs	No Lifting Lugs
Locked Bearing Indicator	Locked Bearing
Motor Lead Quantity/Wire Size	3 @ 16 AWG
Motor Lead Termination	Flying Leads
Motor Standards	NEMA
Motor Type	3524B
Mounting Arrangement	F1
Number of Poles	4
Overall Length	16.71 IN
Power Factor	93
Product Family	General Purpose
Pulley Face Code	Standard
Rodent Screen	None
Service Factor	1.00
Shaft Diameter	0.875 IN
Shaft Ground Indicator	Shaft Grounding
Shaft Rotation	Reversible
Speed	1800 rpm
Speed Code	Single Speed
Starting Method	Direct on line
Thermal Device - Bearing	None
Thermal Device - Winding	None
Vibration Sensor Indicator	No Vibration Sensor
Winding Thermal 1	None
Winding Thermal 2	None

BALDOR·RELIANCE

EC-Titanium™

CAT. NO.	ECS101A8H2DF4						
SPEC.	35E5247G964				YR	***	
FRAME	145T		ENCL.	TEFC	IP	54	
HP	2	RATING	40C AMB-CONT				
NOM. EFF.	91.3	PF	93	SF	1.00		
VOLTS	230		FLA	4.8			
RPM	1800		RPM MAX	4000			
HZ	60		PH.	3	CLASS	F	
BEMF (V)	148		Rs (Ω)	2.94			
Ld (mH)	22.1		Lq (mH)	97.1			
INV TYP	VPWM	CHP	60 TO 133 HZ				
	CT	6 TO 60 HZ	VT	6 TO 60 HZ			
MATCHED INV	ECIN8A7P0						
BEARING	DE	6205	ODE	6203			
SERIAL#	***						

ELECTRONICALLY PROTECTED MOTOR
FOR INDUSTRIAL USE

FERRITE ASSISTED
SYNCHRONOUS RELUCTANCE MOTOR
FOR INVERTER USE ONLY

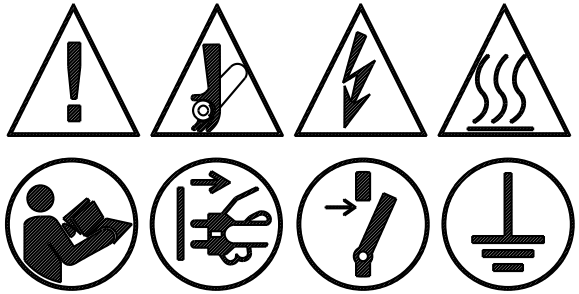

PERMANENT MAGNET MOTOR. WHEN SHAFT IS ROTATED, VOLTAGE WILL BE GENERATED AT THE MOTOR TERMINALS.
MOTEUR Á AIMANT PERMANENT. LORSQUE L'ARBRE TOURNE, UNE TENSION SERA GÉNÉRÉE AUX BORNES DU MOTEUR.

BALDOR-RELIANCE
SHAFT GROUNDING BRUSH INSTALLED

c UL us LISTED
E46145

ABB MOTORS AND MECHANICAL INC.
5711 R.S. BOREHAM JR. ST., FORT SMITH, AR. MFG IN U.S.A.

BALDOR • RELIANCE

EC-Titanium™

PART NO.	EC1N8A7P0				
U1	240	PH	1	HZ	60
I1 MAX	12.5	W/EXT. CHOKE			10.2
SERIAL #	***				



POWER DOWN FOR
5 MINUTES BEFORE
REMOVING COVER

METTRE HORS TENSION
PENDANT 5 MINUTES
AVANT DE RETIRER LE
COUVERCLE

ABB MOTORS AND MECHANICAL
INC. FORT SMITH, AR.
MFG. IN U.S.A.

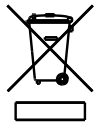

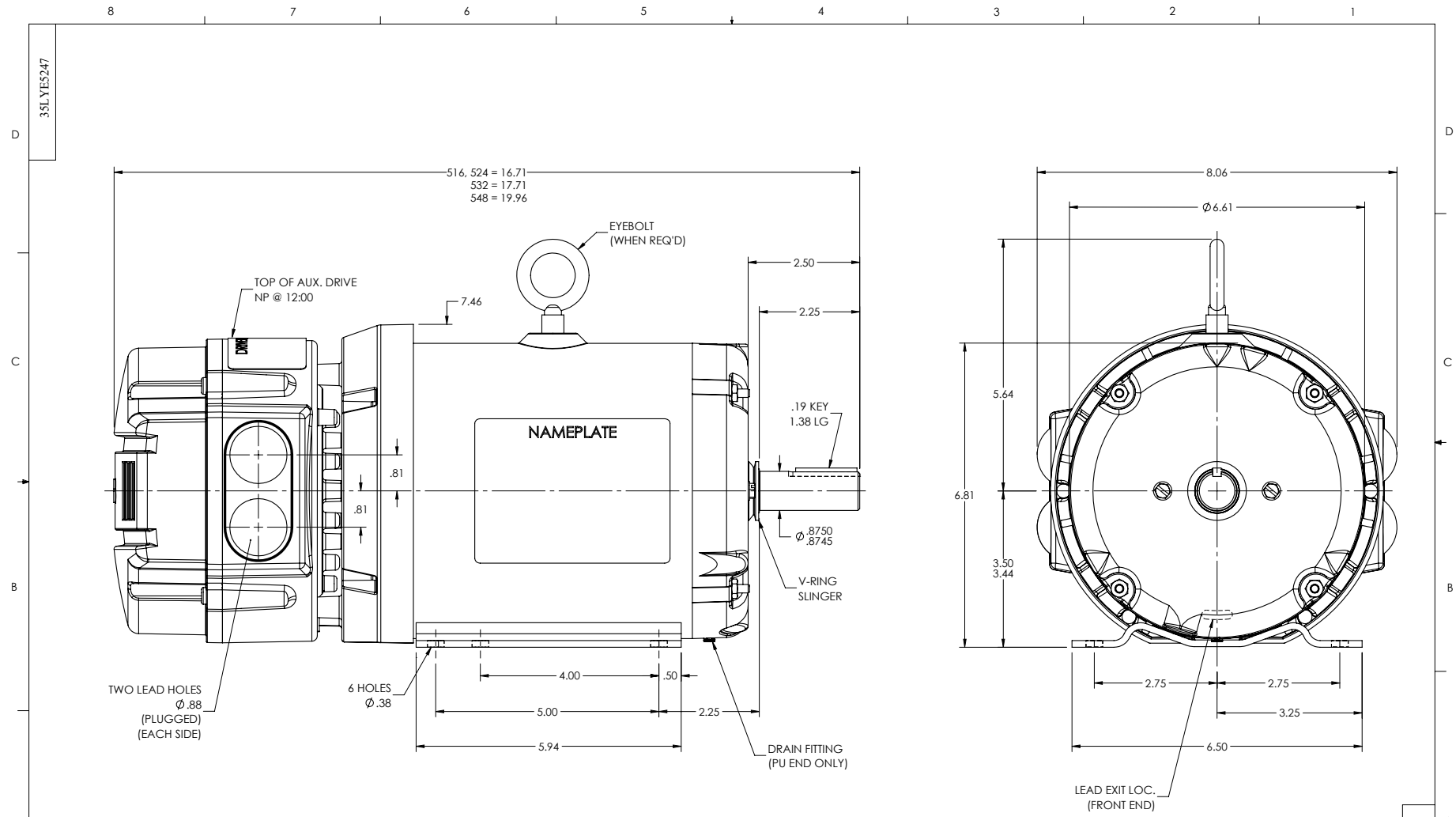
35LYE5247
516, 524 = 16.71
532 = 17.71
548 = 19.96
EYEBOLT
(WHEN REQ'D)
TOP OF AUX. DRIVE
NP @ 12:00
7.46
2.50
2.25
.19 KEY
1.38 LG
NAMEPLATE
.81
.81
Ø .8750
.8745
V-RING
SLINGER
TWO LEAD HOLES
Ø .88
(PLUGGED)
(EACH SIDE)
6 HOLES
Ø .38
4.00
.50
5.00
2.25
5.94
DRAIN FITTING
(PU END ONLY)
8.06
Ø 6.61
5.64
6.81
3.50
3.44
2.75
2.75
3.25
6.50
LEAD EXIT LOC.
(FRONT END)
CUSTOMER IS RESPONSIBLE FOR DETERMINING THAT THE PRODUCT WILL PERFORM SUITABLY IN THE INTENDED APPLICATION
REV. DESC: ADDED EYEBOLT GRAPHICS
REV: K
VERSION: 10
REVISED: 09:04:43 03/19/2026
TDR: 000001272816
MODEL NO. 35LYE5247
REF: -
BY: ENJEFD0
B
BALDOR - RELIANCE®
HOR 143-5T TEFC B ODE MOUNT DRV INT SH GND ECS
35LYE5247

CD0006B03

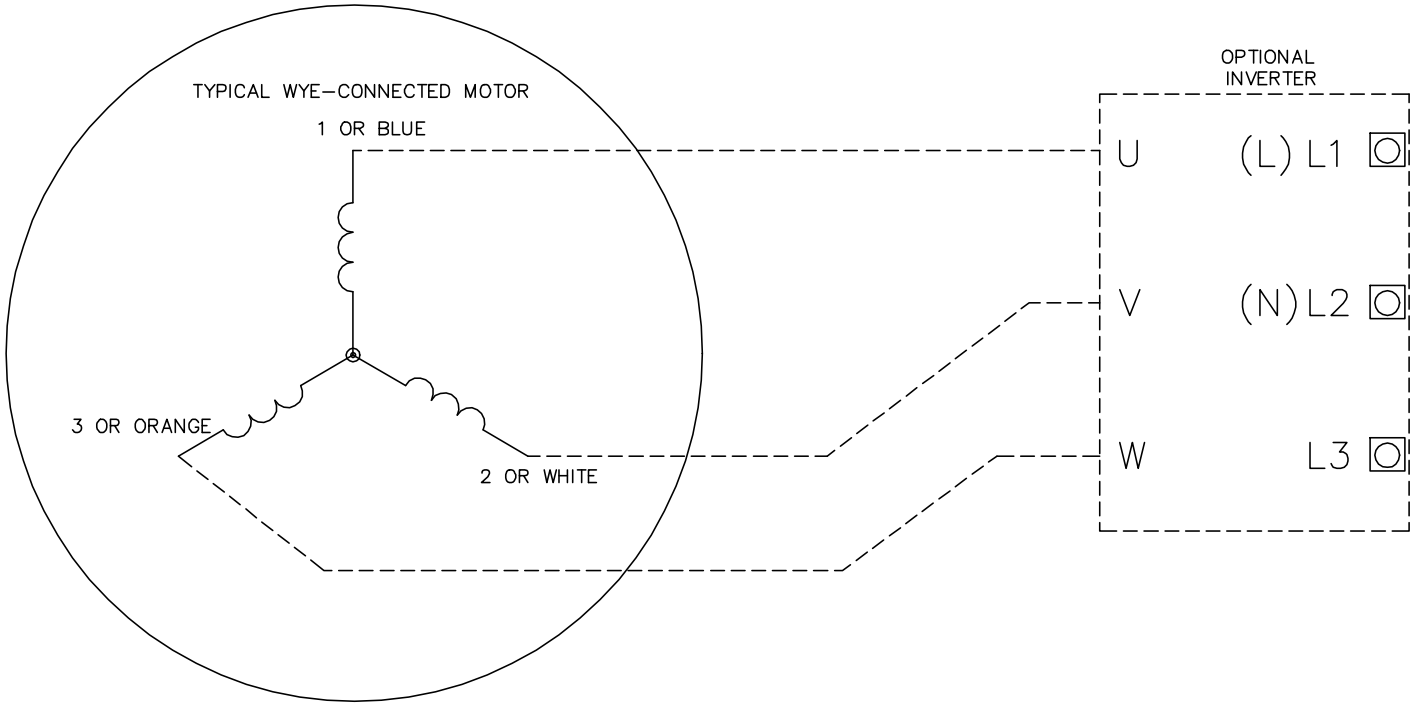

NOTES:

1. INTERCHANGE ANY TWO LINE LEADS TO REVERSE ROTATION.
2. ACTUAL NUMBER OF INTERNAL PARALLEL CIRCUITS MAY VARY.

CD0006B03

REV. DESC: CHANGE LEAD COLORS TO BLUE WHITE ORANGE		
REV. LTR: A	VERSION: 01	TDR: 000001158598
FILE: \AAA\00252\917	REVISED: 11:01:03 01/19/2021	BY: ENMARSO
MTL: –		

BALDOR - RELIANCE®

3PH, SV, 3 LEADS, WYE CONNECTED, ECS

SH 1 of 1