ABB BALDOR RELIANCE

Customer information packet

ECS100T4H10FF4

10HP, 1800RPM, 3PH, 60HZ, 215T, TEFC, TOP
Class - None
Division - Not Applicable

Copyright © All product information within this document is subject to ABB Motors and Mechanical Inc. copyright © protection, unless otherwise noted.
11/23/2026 4:16:44 AM

Specifications

Enclosure	TEFC
Frame	215T
Frame Material	Steel
Frequency	60.00 Hz
Haz Area Class and Group	None
Haz Area Division	Not Applicable
Motor Letter Type	Three Phase
Phase	3
Agency Approvals	UL
	WEEE
Auxiliary Box	NO AUXILLARY BOX
Auxiliary Box Lead Termination	None
Base Indicator	Rigid
Bearing Grease Type	Polyrex EM (-20F +300F)
Blower	None
Constant Torque Speed Range	6
Design Code	0
Drip Cover	No Drip Cover
Electrically Isolated Bearing	Not Electrically Isolated
Feedback Device	NO FEEDBACK
Heater Indicator	No Heater
Inverter Code	Inverter Duty
Lifting Lugs	Standard Lifting Lugs
Locked Bearing Indicator	Locked Bearing
Motor Lead Quantity/Wire Size	3 @ 12 AWG
Motor Lead Termination	Flying Leads
Motor Standards	NEMA
Motor Type	3740B
Mounting Arrangement	F1
Number of Poles	4
Overall Length	19.23 IN
Product Family	General Purpose

Part Detail

Revision	M
Type	AC
Mech. spec.	37Q460
Base	
Status	PRD/A
Elec. spec.	37WGL009
Layout	37LYQ460
Eff. date	02-11-2026
CD Diagram	CD0006
Poles	04
Leads	3#12
Proprietary	False
Created date	02-05-2020

Pulley Face Code	Standard
Rodent Screen	None
RoHS Status	ROHS COMPLIANT
Shaft Diameter	1.375 IN
Shaft Ground Indicator	Shaft Grounding
Shaft Rotation	Reversible
Speed Code	Single Speed
Starting Method	INVERTER SPECIAL
Thermal Device - Bearing	None
Thermal Device - Winding	None
Vibration Sensor Indicator	No Vibration Sensor
Winding Thermal 1	None
Winding Thermal 2	None

BALDOR·RELIANCE

EC-Titanium™

CAT. NO.	ECS100T4H10FF4						
SPEC.	37Q460L009G1				YR	***	
FRAME	215T		ENCL.	TEFC	IP	54	
HP	10	RATING	40C AMB-CONT				
NOM. EFF.	94.8%	PF	93.7%	SF	1.00		
VOLTS	460		FLA	11.0			
RPM	1800	RPM MAX	3000				
HZ	60	PH.	3	CLASS	F		
BEMF (V)	231	Rs (Ω)	A				
Ld (mH)	A	Lq (mH)	A				
INV TYP	VPWM	CHP	60 TO 100 HZ				
	CT	6 TO 60 HZ	VT	1 TO 60 HZ			
MATCHED INV	EC14A12P0						
BEARING	DE	6307	ODE	6206			
SERIAL#	***						

ELECTRONICALLY PROTECTED MOTOR
FOR INDUSTRIAL USE

FERRITE ASSISTED
SYNCHRONOUS RELUCTANCE MOTOR
FOR INVERTER USE ONLY

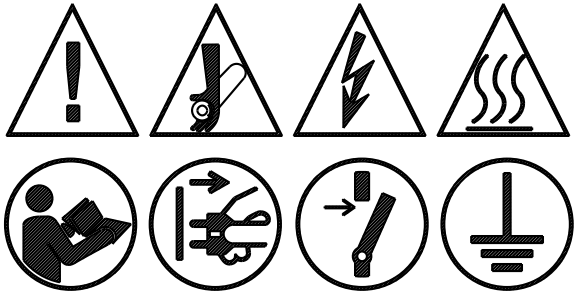

PERMANENT MAGNET MOTOR. WHEN SHAFT IS ROTATED, VOLTAGE WILL BE GENERATED AT THE MOTOR TERMINALS.
MOTEUR Á AIMANT PERMANENT. LORSQUE L'ARBRE TOURNE, UNE TENSION SERA GÉNÉRÉE AUX BORNES DU MOTEUR.

BALDOR-RELIANCE
SHAFT GROUNDING BRUSH INSTALLED

c UL us LISTED
E46145

ABB MOTORS AND MECHANICAL INC.
5711 R.S. BOREHAM JR. ST., FORT SMITH, AR. MFG IN U.S.A.

BALDOR • RELIANCE

EC-Titanium™

PART NO.	EC14A12P0				
U1	480	PH	3	HZ	60
I1 MAX	10.1	W/EXT. CHOKE			9.4
SERIAL #	***				



POWER DOWN FOR
5 MINUTES BEFORE
REMOVING COVER

METTRE HORS TENSION
PENDANT 5 MINUTES
AVANT DE RETIRER LE
COUVERCLE

ABB MOTORS AND MECHANICAL
INC. FORT SMITH, AR.
MFG. IN U.S.A.

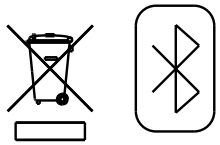

37LYQ460

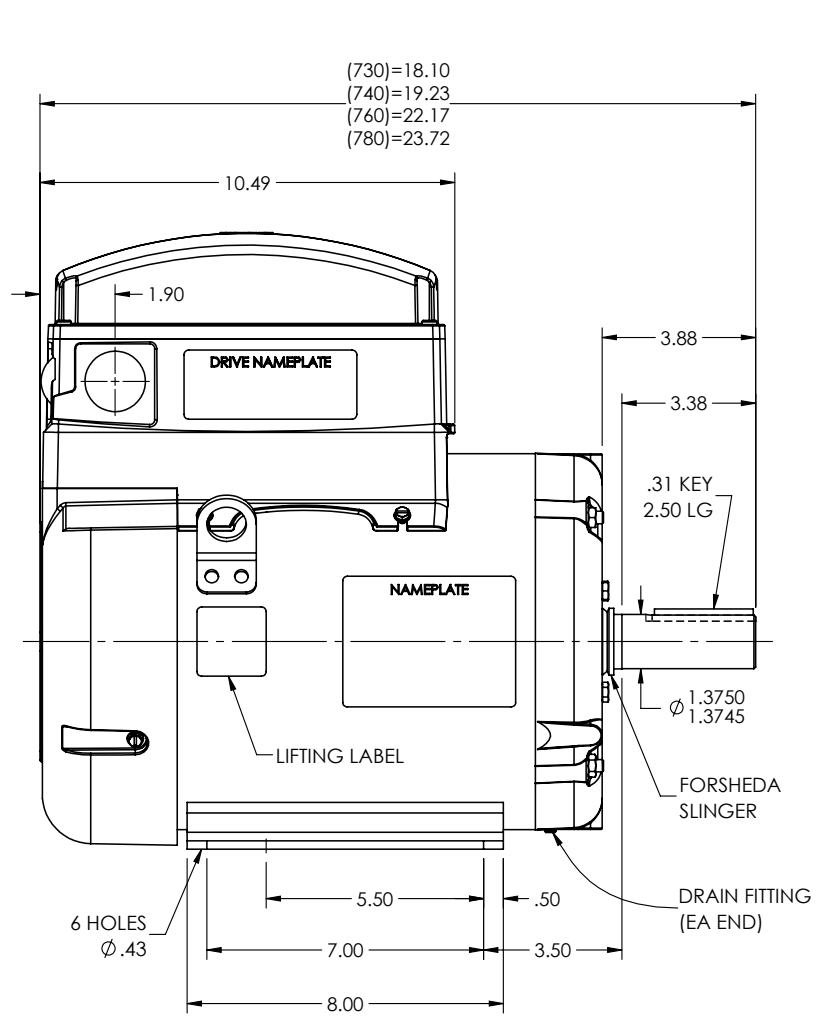

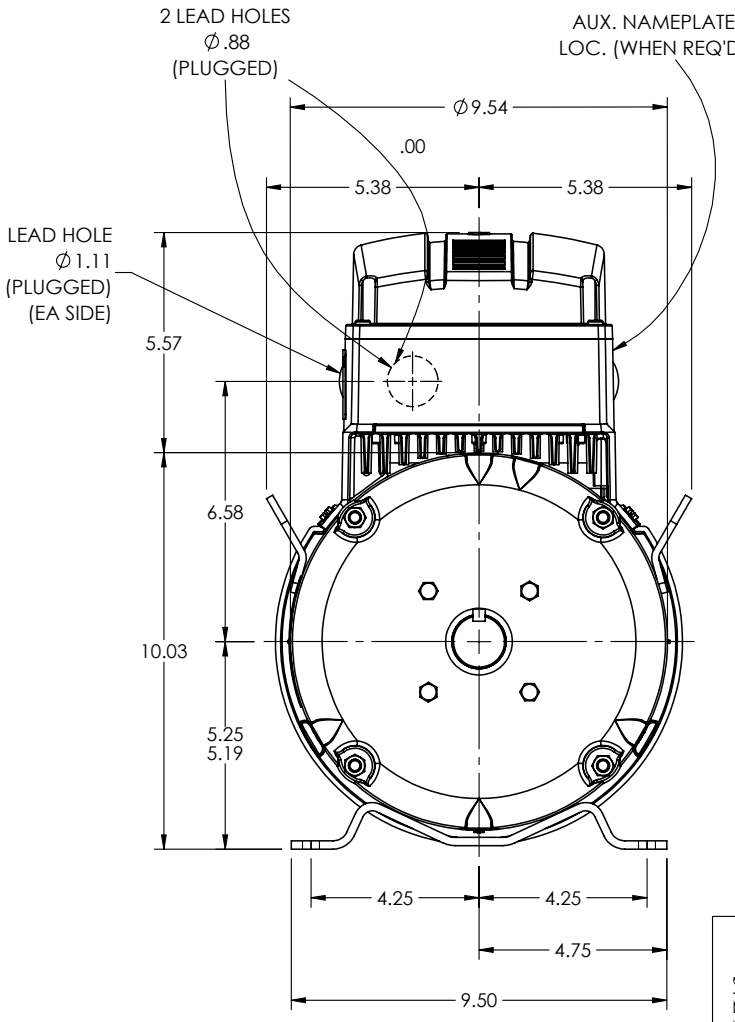

REV. DESC: HW313104A59 WAS HW3100A82			
REV: H	VERSION: 08	REVISED: 09:32:21 06/05/2025	TDR: 000001256072
37LYQ460	MODEL NO. 37LYQ460		REF: -
	BY: USEROLI		

BALDOR - RELIANCE®

HOR 213-5T TEFC B TOP MOUNT DRV INT SH GND ECS

37LYQ460

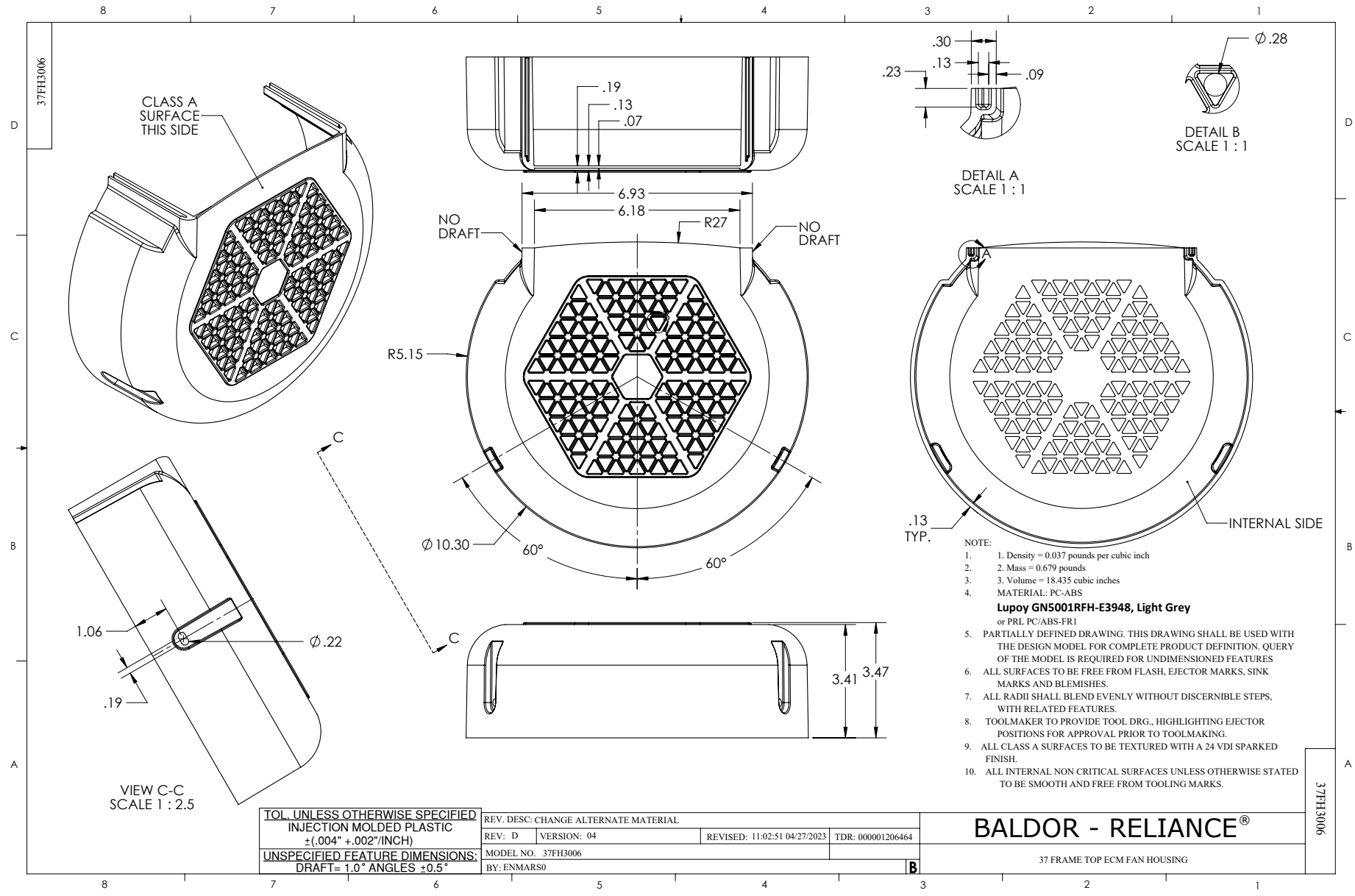

NOTE:
1. 1. Density = 0.037 pounds per cubic inch
2. 2. Mass = 0.679 pounds
3. 3. Volume = 18.435 cubic inches
4. MATERIAL: PC-ABS
   Lupoy GN5001RFH-E3948, Light Grey
   or PRL PC/ABS-FR1
5. PARTIALLY DEFINED DRAWING. THIS DRAWING SHALL BE USED WITH THE DESIGN MODEL FOR COMPLETE PRODUCT DEFINITION. QUERY OF THE MODEL IS REQUIRED FOR UNDIMENSIONED FEATURES
6. ALL SURFACES TO BE FREE FROM FLASH, EJECTOR MARKS, SINK MARKS AND BLEMISHES.
7. ALL RADII SHALL BLEND EVENLY WITHOUT DISCERNIBLE STEPS, WITH RELATED FEATURES.
8. TOOLMAKER TO PROVIDE TOOL DRG., HIGHLIGHTING EJECTOR POSITIONS FOR APPROVAL PRIOR TO TOOLMAKING.
9. ALL CLASS A SURFACES TO BE TEXTURED WITH A 24 VDI SPARKED FINISH.
10. ALL INTERNAL NON CRITICAL SURFACES UNLESS OTHERWISE STATED TO BE SMOOTH AND FREE FROM TOOLING MARKS.

TOL. UNLESS OTHERWISE SPECIFIED INJECTION MOLDED PLASTIC ±(.004" +.002"/INCH)	REV. DESC: CHANGE ALTERNATE MATERIAL		
	REV: D VERSION: 04	REVISED: 11:02:51 04/27/2023	TDR: 000001206464
UNSPECIFIED FEATURE DIMENSIONS: DRAFT= 1.0° ANGLES ±0.5°	MODEL NO. 37FH3006		
	BY: ENMARS0		B

BALDOR - RELIANCE®

37 FRAME TOP ECM FAN HOUSING

37FH3006

36CB3501A00

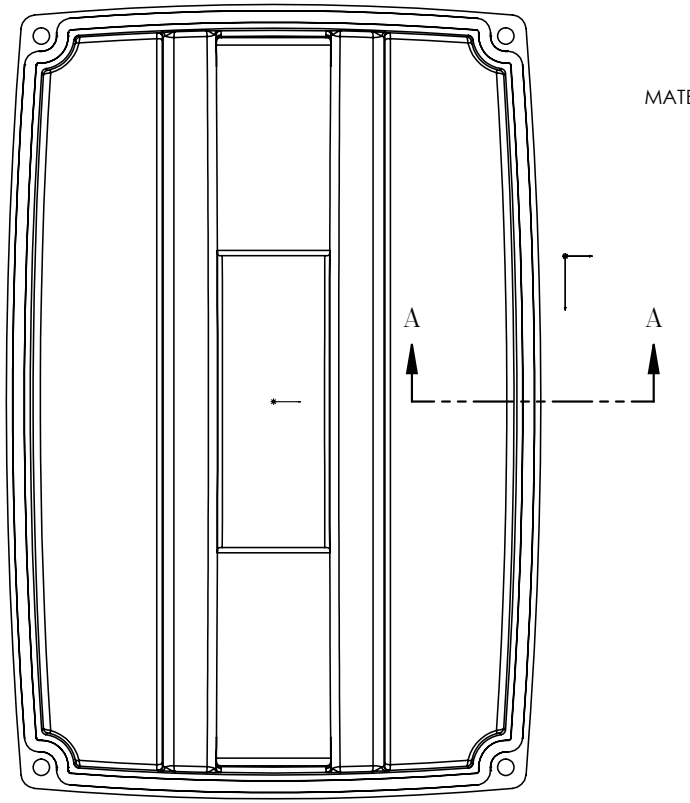

MATERIAL: RAMPF, RAKU-PUR 32-3280-51L

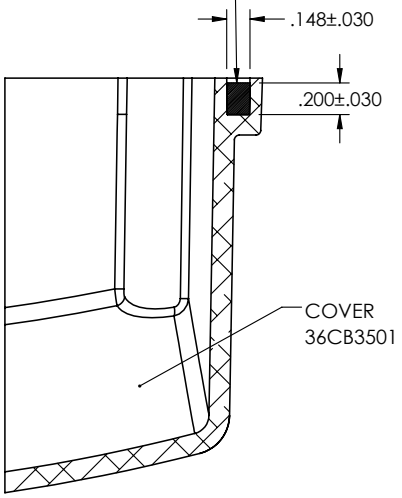

SECTION A–A

36CB3501A00

REV. DESC: UPDATE MATERIAL			
REV: A	VERSION: 01	REVISED: 10:46:37 03/29/2019	TDR: 000001101646
	MODEL NO. 36CB3501A00		REF: -
	BY: ENMARS0	Material: -	

BALDOR - RELIANCE®

36 & 37 FRAME TOP ECM COVER WITH FOAM SEAL

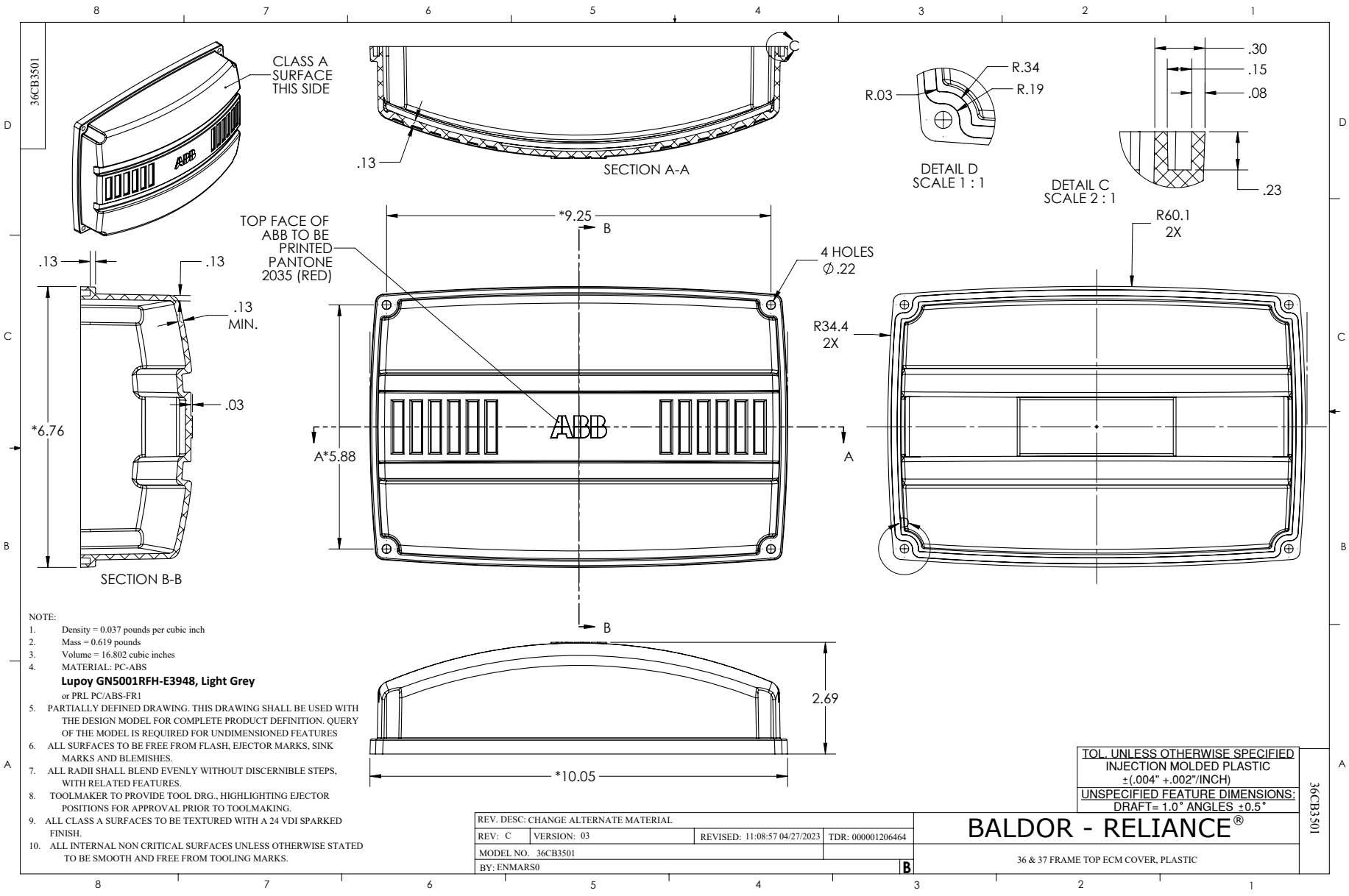

NOTE:
1. Density = 0.037 pounds per cubic inch
2. Mass = 0.619 pounds
3. Volume = 16.802 cubic inches
4. MATERIAL: PC-ABS
   Lupoy GN5001RFH-E3948, Light Grey
   or PRL PC/ABS-FR1
5. PARTIALLY DEFINED DRAWING. THIS DRAWING SHALL BE USED WITH THE DESIGN MODEL FOR COMPLETE PRODUCT DEFINITION. QUERY OF THE MODEL IS REQUIRED FOR UNDIMENSIONED FEATURES
6. ALL SURFACES TO BE FREE FROM FLASH, EJECTOR MARKS, SINK MARKS AND BLEMISHES.
7. ALL RADII SHALL BLEND EVENLY WITHOUT DISCERNIBLE STEPS, WITH RELATED FEATURES.
8. TOOLMAKER TO PROVIDE TOOL DRG., HIGHLIGHTING EJECTOR POSITIONS FOR APPROVAL PRIOR TO TOOLMAKING.
9. ALL CLASS A SURFACES TO BE TEXTURED WITH A 24 VDI SPARKED FINISH.
10. ALL INTERNAL NON CRITICAL SURFACES UNLESS OTHERWISE STATED TO BE SMOOTH AND FREE FROM TOOLING MARKS.

REV. DESC: CHANGE ALTERNATE MATERIAL			
REV: C	VERSION: 03	REVISED: 11:08:57 04/27/2023	TDR: 000001206464
MODEL NO. 36CB3501			
BY: ENMARS0			B

TOL. UNLESS OTHERWISE SPECIFIED
INJECTION MOLDED PLASTIC
±(.004" +.002"/INCH)
UNSPECIFIED FEATURE DIMENSIONS:
DRAFT= 1.0° ANGLES ±0.5°

BALDOR - RELIANCE®

36 & 37 FRAME TOP ECM COVER, PLASTIC

36CB3501

CD0006

TYPICAL WYE–CONNECTED MOTOR

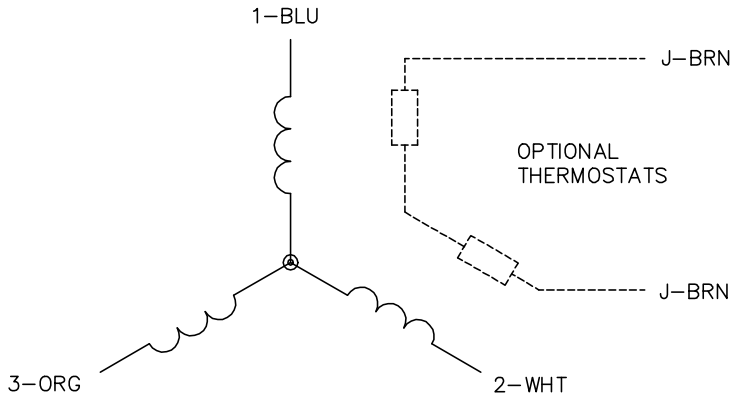

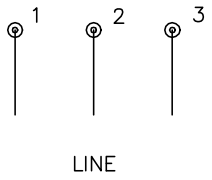

TYPICAL DELTA–CONNECTED MOTOR

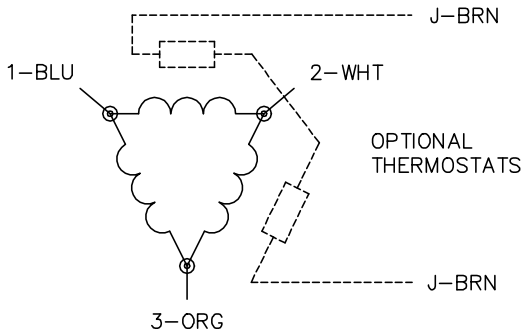

NOTES:

1. THREE LEAD MOTOR MAY BE EITHER WYE CONNECTED OR DELTA CONNECTED.
2. INTERCHANGE ANY TWO LINE LEADS TO REVERSE ROTATION.
3. OPTIONAL THERMOSTATS ARE PROVIDED WHEN SPECIFIED.
4. ACTUAL NUMBER OF INTERNAL PARALLEL CIRCUITS MAY VARY.
5. LEAD COLORS ARE OPTIONAL. LEADS MUST BE NUMBERED AS SHOWN.

CD0006

REV. DESC: ADD CLASS CONN00000007		
REV. LTR: E	VERSION: 01	TDR: 000001099922
FILE: \AAA\00005\141	REVISED: 10:24:49 02/19/2019	BY: ENBRIR0
MTL: –		

BALDOR - RELIANCE®

3PH, SV, 3 LEADS, WYE OR DELTA CONNECTED

SH 1 of 1