ABB BALDOR RELIANCE

Customer information packet

ECS100T2H5EF4

5HP, 1800RPM, 3PH, 60HZ, 184T, TEFC, TOP
Class - None
Division - Not Applicable

Copyright © All product information within this document is subject to ABB Motors and Mechanical Inc. copyright © protection, unless otherwise noted.
11/25/2026 4:02:49 AM

Specifications

Enclosure	TEFC
Frame	184T
Frame Material	Steel
Frequency	60.00 Hz
Haz Area Class and Group	None
Haz Area Division	Not Applicable
Motor Letter Type	Three Phase
Phase	3
Agency Approvals	UL
	WEEE
Auxiliary Box	NO AUXILLARY BOX
Auxiliary Box Lead Termination	None
Base Indicator	Rigid
Bearing Grease Type	Polyrex EM (-20F +300F)
Blower	None
Constant Torque Speed Range	6
Design Code	B
Drip Cover	No Drip Cover
Electrically Isolated Bearing	Not Electrically Isolated
Feedback Device	NO FEEDBACK
Heater Indicator	No Heater
Inverter Code	Inverter Duty
IP Rating	NONE
Lifting Lugs	Standard Lifting Lugs
Locked Bearing Indicator	Locked Bearing
Motor Lead Quantity/Wire Size	3 @ 14 AWG
Motor Lead Termination	Flying Leads
Motor Standards	NEMA
Motor Type	3632B
Mounting Arrangement	F1
Number of Poles	4
Overall Length	16.71 IN

Part Detail

Revision	Q
Type	AC
Mech. spec.	36T258
Base	
Status	PRD/A
Elec. spec.	36WGL101
Layout	36LYT258
Eff. date	01-06-2026
CD Diagram	CD0006
Poles	04
Leads	3#14
Proprietary	False
Created date	05-29-2019

Product Family	General Purpose
Pulley Face Code	Standard
Rodent Screen	None
RoHS Status	ROHS COMPLIANT
Shaft Diameter	1.125 IN
Shaft Ground Indicator	Shaft Grounding
Shaft Rotation	Reversible
Speed Code	Single Speed
Starting Method	INVERTER SPECIAL
Thermal Device - Bearing	None
Thermal Device - Winding	None
Vibration Sensor Indicator	No Vibration Sensor
Winding Thermal 1	None
Winding Thermal 2	None

BALDOR·RELIANCE

EC-Titanium™

CAT. NO.	ECS100T2H5EF4						
SPEC.	36T258L101G1				YR	***	
FRAME	184T		ENCL.	TEFC	IP	54	
HP	5	RATING	40C AMB-CONT				
NOM. EFF.	93.7	PF	97.3%	SF	1.00		
VOLTS	230		FLA	10.5			
RPM	1800	RPM MAX	4000				
HZ	60	PH.	3	CLASS	F		
BEMF (V)	126		Rs (Ω)	0.82			
Ld (mH)	13.5		Lq (mH)	47.8			
INV TYP	VPWM	CHP	60 TO 133 HZ				
	CT	6 TO 60 HZ	VT	1 TO 60 HZ			
MATCHED INV	EC12A10P5						
BEARING	DE	6206	ODE	6205			
SERIAL#	***						

FERRITE ASSISTED
SYNCHRONOUS RELUCTANCE MOTOR
FOR INVERTER USE ONLY

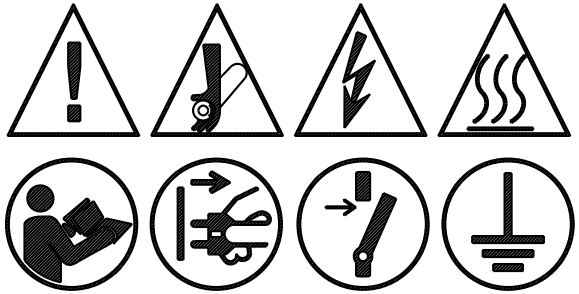

PERMANENT MAGNET MOTOR. WHEN SHAFT IS ROTATED, VOLTAGE WILL BE GENERATED AT THE MOTOR TERMINALS.
MOTEUR Á AIMANT PERMANENT. LORSQUE L'ARBRE TOURNE, UNE TENSION SERA GÉNÉRÉE AUX BORNES DU MOTEUR.

BALDOR-RELIANCE
SHAFT GROUNDING BRUSH INSTALLED

c UL us LISTED
E46145

ELECTRONICALLY PROTECTED MOTOR
FOR INDUSTRIAL USE

ABB MOTORS AND MECHANICAL INC.
5711 R.S. BOREHAM JR. ST., FORT SMITH, AR. MFG IN U.S.A.

BALDOR • RELIANCE

EC-Titanium™

PART NO.	EC12A10P5				
U1	240	PH	3	HZ	60
I1 MAX	12.6	W/EXT. CHOKE			10.6
SERIAL #	***				



POWER DOWN FOR
5 MINUTES BEFORE
REMOVING COVER

METTRE HORS TENSION
PENDANT 5 MINUTES
AVANT DE RETIRER LE
COUVERCLE

ABB MOTORS AND MECHANICAL
INC. FORT SMITH, AR.
MFG. IN U.S.A.

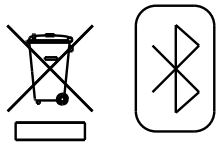

36LYT258

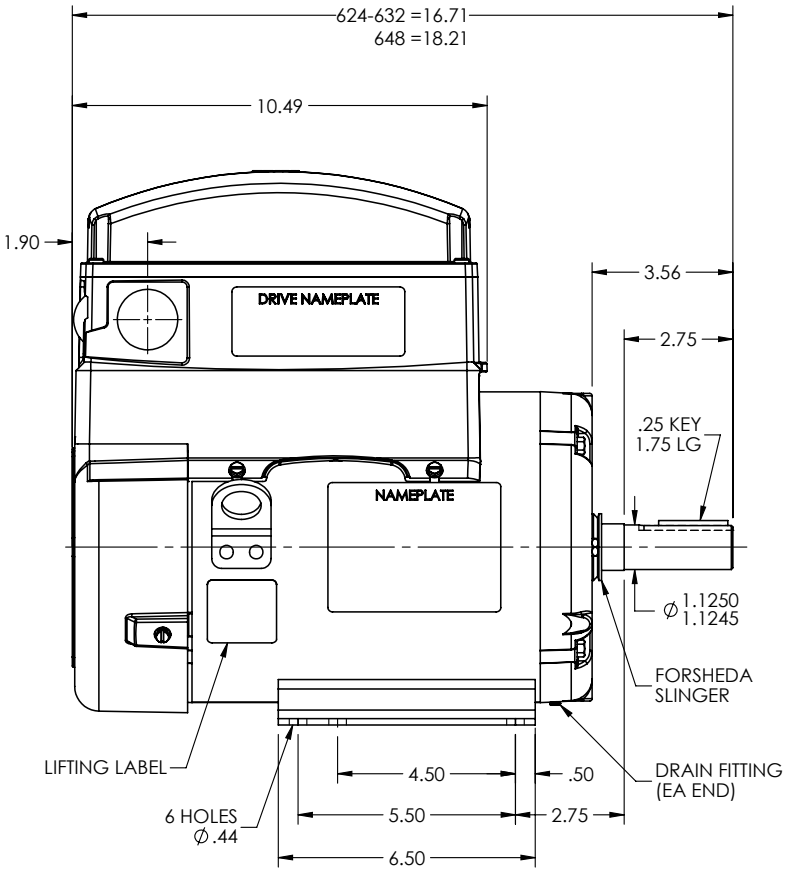

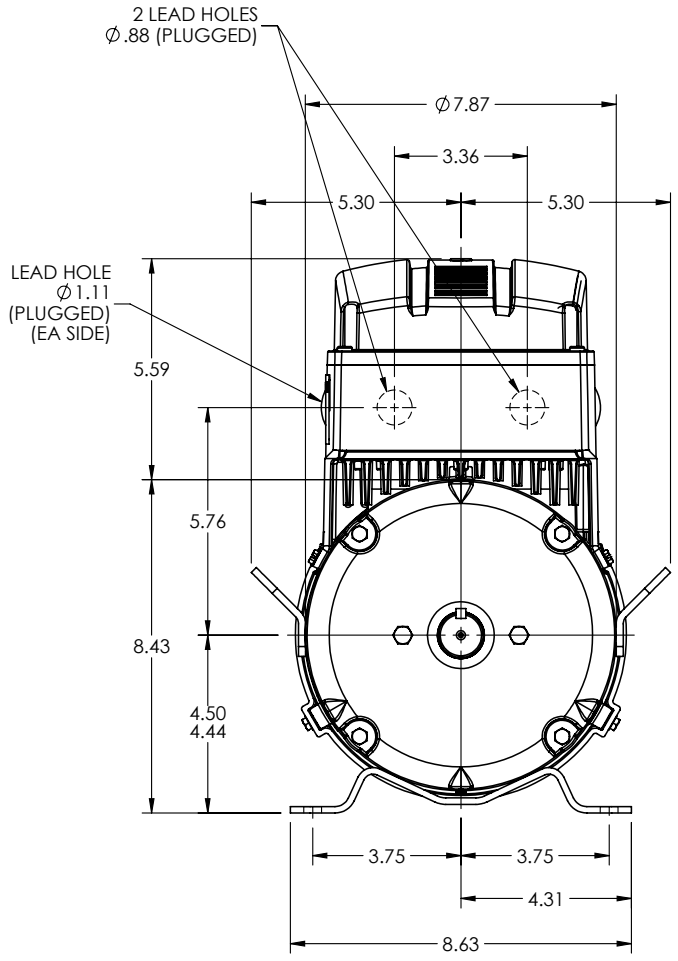

REV. DESC: UPDATE DRAWING GRAPHICS			
REV: F	VERSION: 06	REVISED: 01:15:51 03/15/2022	TDR: 000001187699
	MODEL NO. 36LYT258		REF: -
	BY: ENJEFD0	Material: -	

BALDOR

HORZ 182-4T TEFC B TOP MOUNT DRV INT SH GND ECS

36LYT258

36CB3501A00

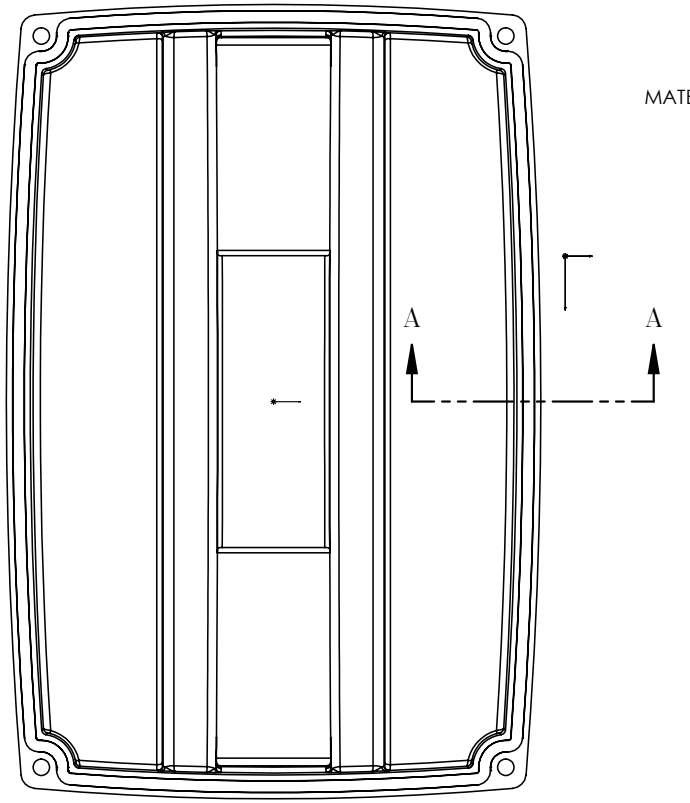

MATERIAL: RAMPF, RAKU-PUR 32-3280-51L

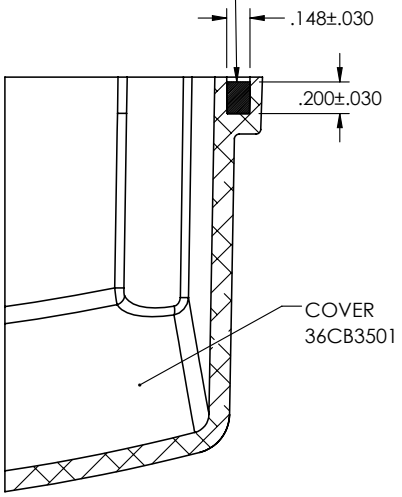

SECTION A–A

36CB3501A00

REV. DESC: UPDATE MATERIAL			
REV: A	VERSION: 01	REVISED: 10:46:37 03/29/2019	TDR: 000001101646
	MODEL NO. 36CB3501A00		REF: -
	BY: ENMARS0	Material: -	

BALDOR - RELIANCE®

36 & 37 FRAME TOP ECM COVER WITH FOAM SEAL

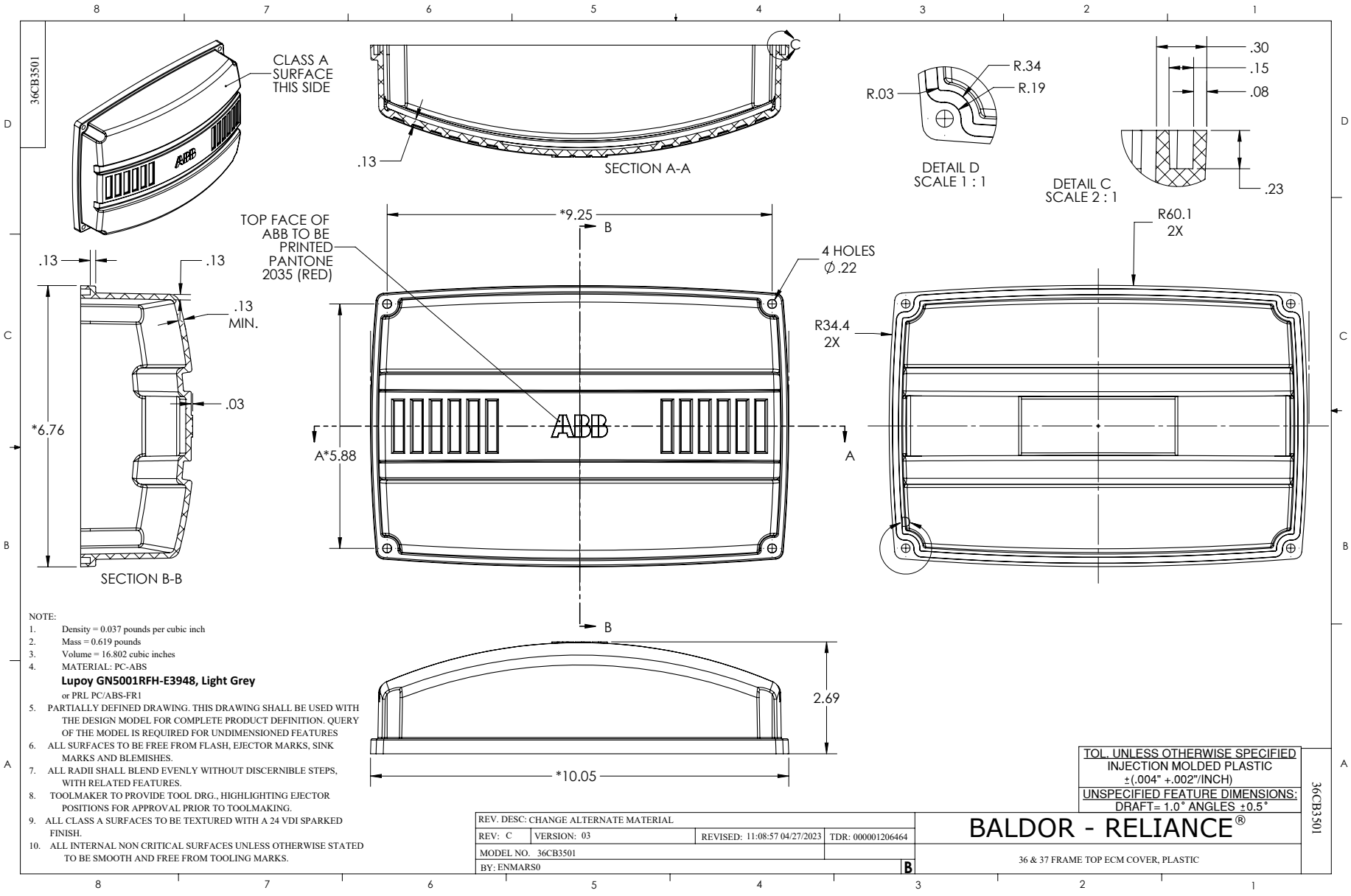

NOTE:
1. Density = 0.037 pounds per cubic inch
2. Mass = 0.619 pounds
3. Volume = 16.802 cubic inches
4. MATERIAL: PC-ABS
   Lupoy GN5001RFH-E3948, Light Grey
   or PRL PC/ABS-FR1
5. PARTIALLY DEFINED DRAWING. THIS DRAWING SHALL BE USED WITH THE DESIGN MODEL FOR COMPLETE PRODUCT DEFINITION. QUERY OF THE MODEL IS REQUIRED FOR UNDIMENSIONED FEATURES
6. ALL SURFACES TO BE FREE FROM FLASH, EJECTOR MARKS, SINK MARKS AND BLEMISHES.
7. ALL RADII SHALL BLEND EVENLY WITHOUT DISCERNIBLE STEPS, WITH RELATED FEATURES.
8. TOOLMAKER TO PROVIDE TOOL DRG., HIGHLIGHTING EJECTOR POSITIONS FOR APPROVAL PRIOR TO TOOLMAKING.
9. ALL CLASS A SURFACES TO BE TEXTURED WITH A 24 VDI SPARKED FINISH.
10. ALL INTERNAL NON CRITICAL SURFACES UNLESS OTHERWISE STATED TO BE SMOOTH AND FREE FROM TOOLING MARKS.

REV. DESC: CHANGE ALTERNATE MATERIAL			
REV: C	VERSION: 03	REVISED: 11:08:57 04/27/2023	TDR: 000001206464
MODEL NO. 36CB3501			
BY: ENMARS0			B

TOL. UNLESS OTHERWISE SPECIFIED
INJECTION MOLDED PLASTIC
±(.004" +.002"/INCH)
UNSPECIFIED FEATURE DIMENSIONS:
DRAFT= 1.0° ANGLES ±0.5°

BALDOR - RELIANCE®

36 & 37 FRAME TOP ECM COVER, PLASTIC

36CB3501

CD0006

TYPICAL WYE–CONNECTED MOTOR

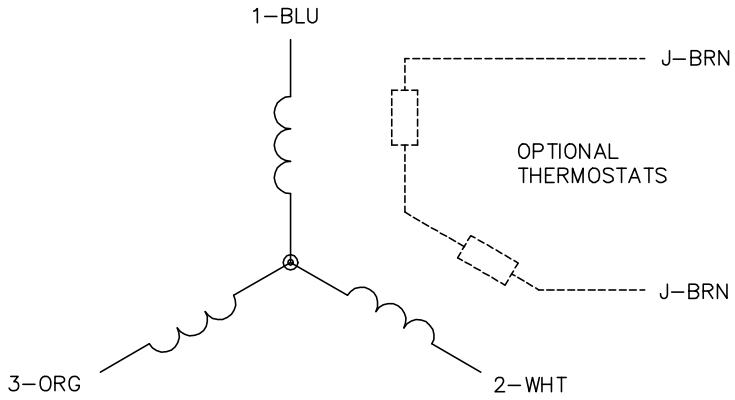

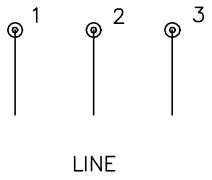

TYPICAL DELTA–CONNECTED MOTOR

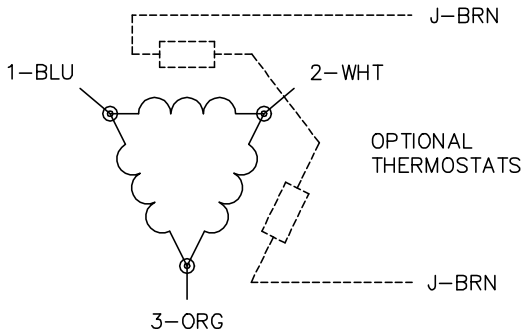

NOTES:

1. THREE LEAD MOTOR MAY BE EITHER WYE CONNECTED OR DELTA CONNECTED.
2. INTERCHANGE ANY TWO LINE LEADS TO REVERSE ROTATION.
3. OPTIONAL THERMOSTATS ARE PROVIDED WHEN SPECIFIED.
4. ACTUAL NUMBER OF INTERNAL PARALLEL CIRCUITS MAY VARY.
5. LEAD COLORS ARE OPTIONAL. LEADS MUST BE NUMBERED AS SHOWN.

CD0006

REV. DESC: ADD CLASS CONN00000007		
REV. LTR: E	VERSION: 01	TDR: 000001099922
FILE: \AAA\00005\141	REVISED: 10:24:49 02/19/2019	BY: ENBRIR0
MTL: –		

BALDOR - RELIANCE®

3PH, SV, 3 LEADS, WYE OR DELTA CONNECTED

SH 1 of 1