35LYE5353

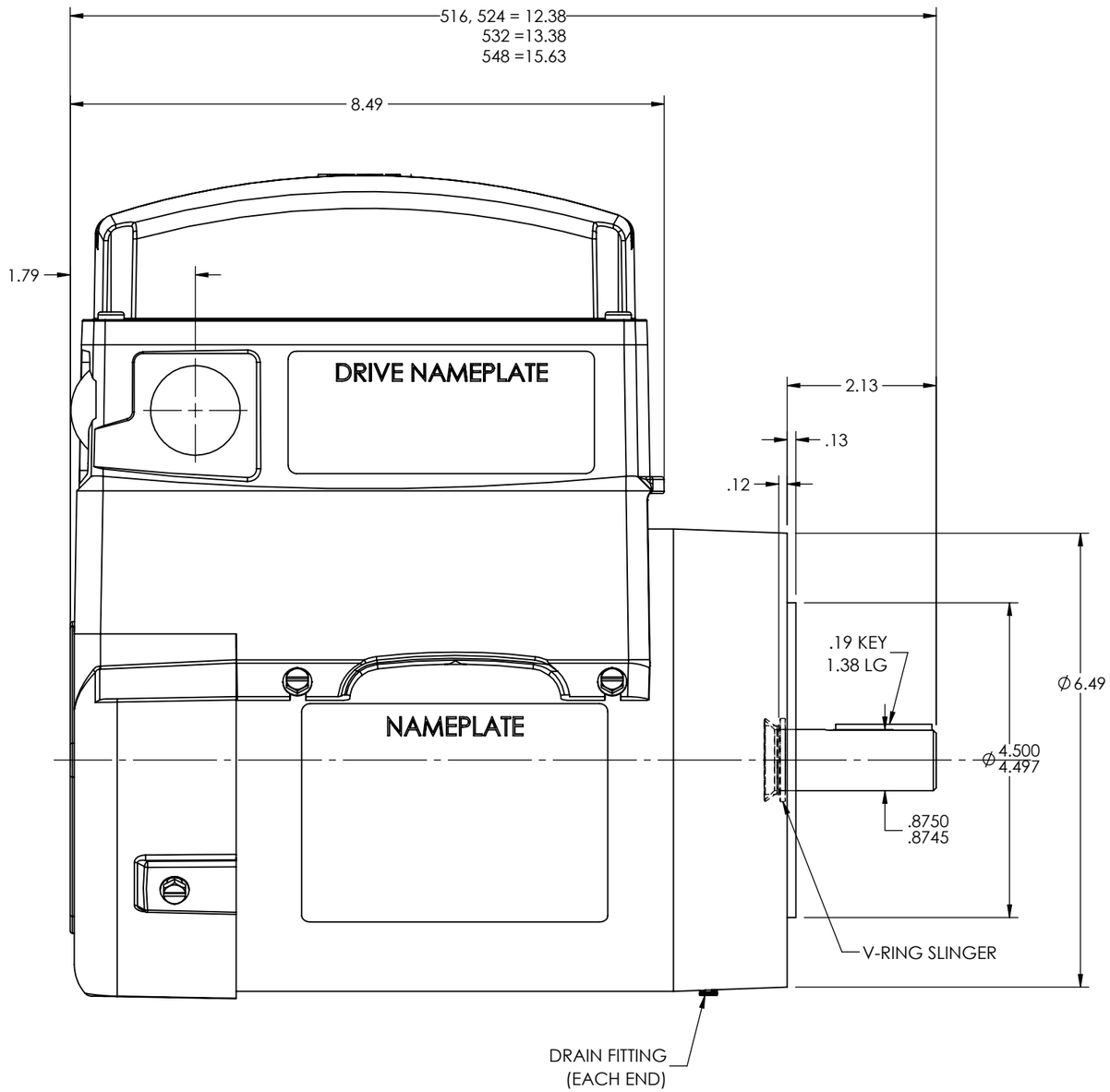

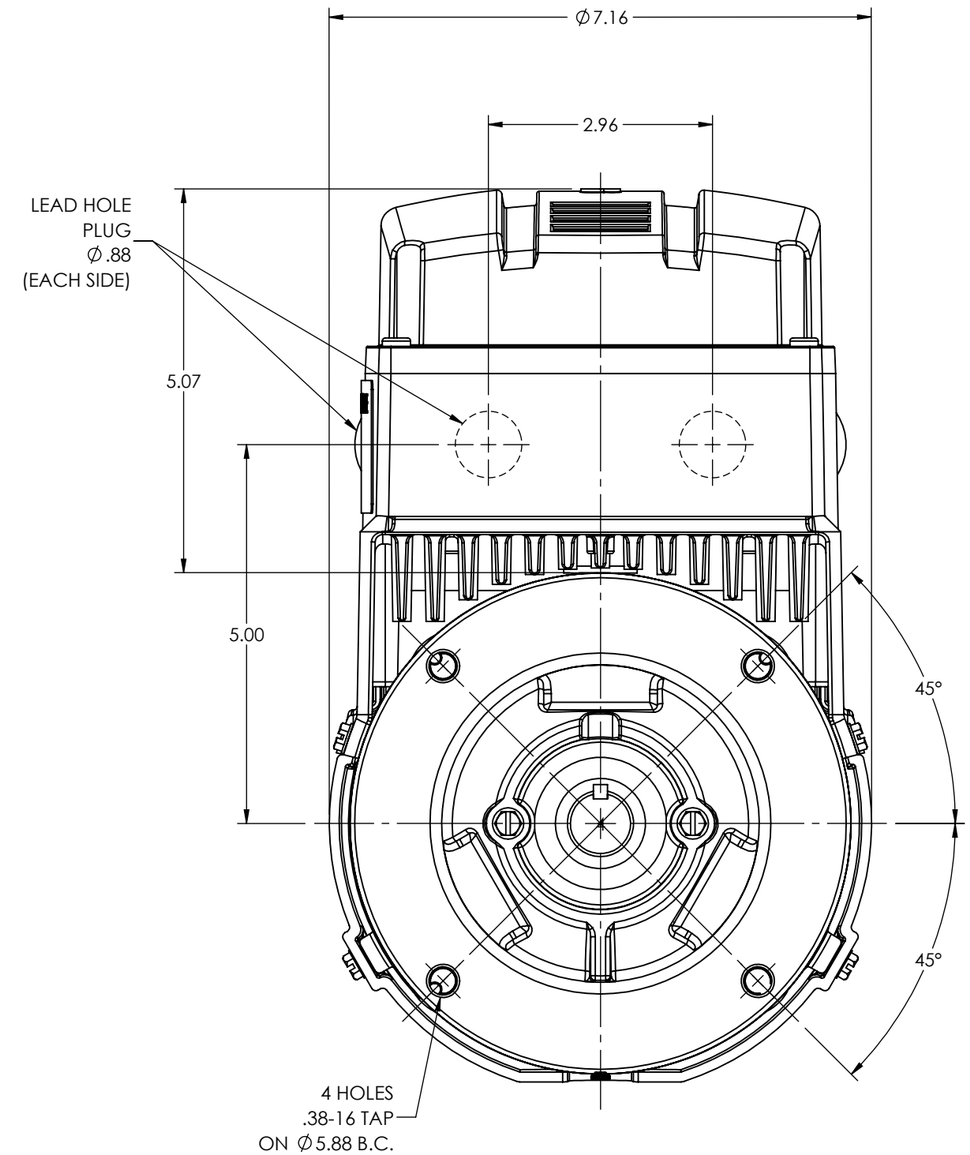

CUSTOMER IS RESPONSIBLE FOR DETERMINING THAT THE PRODUCT WILL PERFORM SUITABLY IN THE INTENDED APPLICATION

REV. DESC: UPDATE STACK RANGES AND CONFIGURATION TABLE			
REV: F	VERSION: 02	REVISED: 04:45:02 08/15/2024	TDR: 000001227155
MODEL NO. 35LYE5353			REF: -
BY: USGRHUR	Material: -		B

BALDOR - RELIANCE®

VER 143-5TC TEFC B TOP MOUNT DRV INT SH GND ECS
SH 1 of 1

35LYE5353