ABB BALDOR RELIANCE

Customer information packet

ECS100A4H5EF4

5HP, 1800RPM, 3PH, 60HZ, 184T, TEFC, AXIAL
Class - None
Division - Not Applicable

Copyright © All product information within this document is subject to ABB Motors and Mechanical Inc. copyright © protection, unless otherwise noted.
11/23/2026 4:17:52 AM

Specifications

Enclosure	TEFC
Frame	184T
Frame Material	Steel
Frequency	60.00 Hz
Haz Area Class and Group	None
Haz Area Division	Not Applicable
Motor Letter Type	Three Phase
Phase	3
Agency Approvals	UL
	WEEE
Auxiliary Box	NO AUXILLARY BOX
Auxiliary Box Lead Termination	None
Base Indicator	Rigid
Bearing Grease Type	Polyrex EM (-20F +300F)
Blower	None
Constant Torque Speed Range	6
Design Code	B
Drip Cover	No Drip Cover
Electrically Isolated Bearing	Not Electrically Isolated
Feedback Device	NO FEEDBACK
Heater Indicator	No Heater
Inverter Code	Inverter Duty
IP Rating	NONE
Lifting Lugs	Standard Lifting Lugs
Locked Bearing Indicator	Locked Bearing
Motor Lead Quantity/Wire Size	3 @ 14 AWG
Motor Lead Termination	Flying Leads
Motor Standards	NEMA
Motor Type	3632B
Mounting Arrangement	F1
Number of Poles	4
Overall Length	22.25 IN

Part Detail

Revision	K
Type	AC
Mech. spec.	36T259
Base	
Status	PRD/A
Elec. spec.	36WGL097
Layout	36LYT259
Eff. date	01-06-2026
CD Diagram	CD0006
Poles	04
Leads	3#14 Y
Proprietary	False
Created date	02-06-2020

Product Family	General Purpose
Pulley Face Code	Standard
Rodent Screen	None
RoHS Status	ROHS COMPLIANT
Shaft Diameter	1.125 IN
Shaft Ground Indicator	Shaft Grounding
Shaft Rotation	Reversible
Speed Code	Single Speed
Starting Method	INVERTER SPECIAL
Thermal Device - Bearing	None
Thermal Device - Winding	None
Vibration Sensor Indicator	No Vibration Sensor
Winding Thermal 1	None
Winding Thermal 2	None

Nameplate

NP3968A01A01								
CAT.NO.	ECS100A4H5EF4							
SPEC.	36T259L097G1							
FRAME	184T		**ENCL.**	TEFC	**IP**	54		
HP	5	40	**C AMB**	CONT				
NOM. EFF.	93.7%	**PF**	97.3%	**SF**	1.00			
VOLTS	460		**FLA**	5.3				
RPM	1800		**RPM-MAX**	4000				
HZ	60	**PH.**	3	**CLASS**	F			
BEMF (V)	252		**RS (OHMS)**	3.30				
LD (MH)	54.0		**LQ (MH)**	191.0				
VPWM	**CHP**	60	**TO**	133				
CT	6	**TO**	60	**VT**	1	**TO**	60	
MATCHED INV	ECI4A5P8							
DE	6206		**ODE**	6205				
SERIAL #								

NP3978A01					
PART NO.	ECI4A5P8				
U1	480	**PH**	3	**HZ**	60
I1	7.1	**W/EXT. CHOKE**			6.0
SERIAL #					

36LYT259

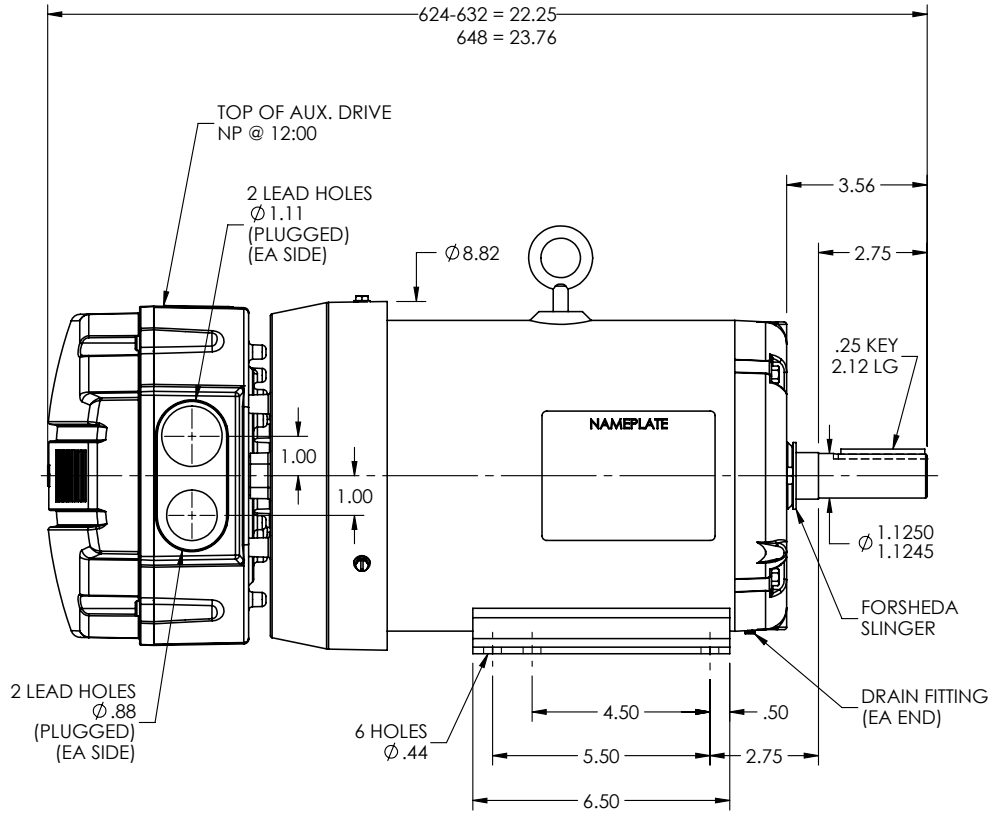

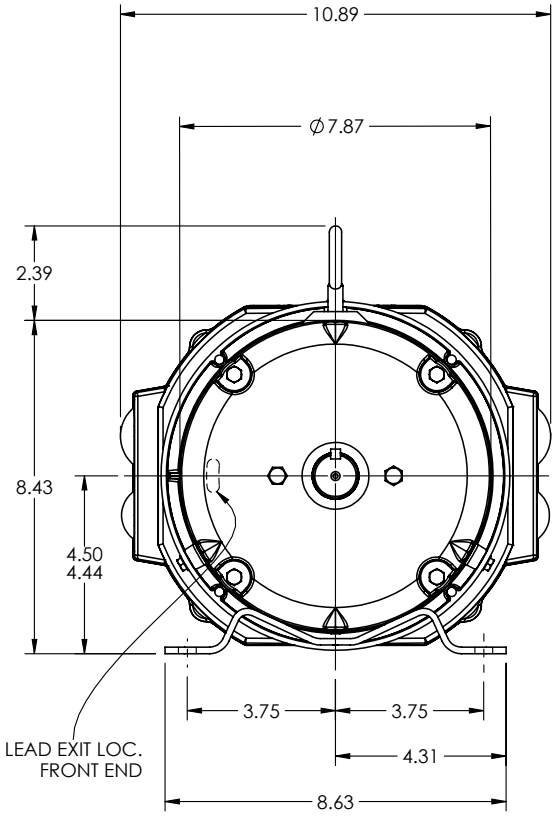

36LYT259

REV. DESC: UPDATE DRAWING GRAPHICS			
REV: E	VERSION: 05	REVISED: 09:37:18 03/16/2022	TDR: 000001187699
	MODEL NO. 36LYT259		REF: -
	BY: ENJEFD0	Material: -	

BALDOR

HOR 182-4T TEFC B ODE MOUNT DRV INT SH GND ECS

36LYT259

36CB3500A00

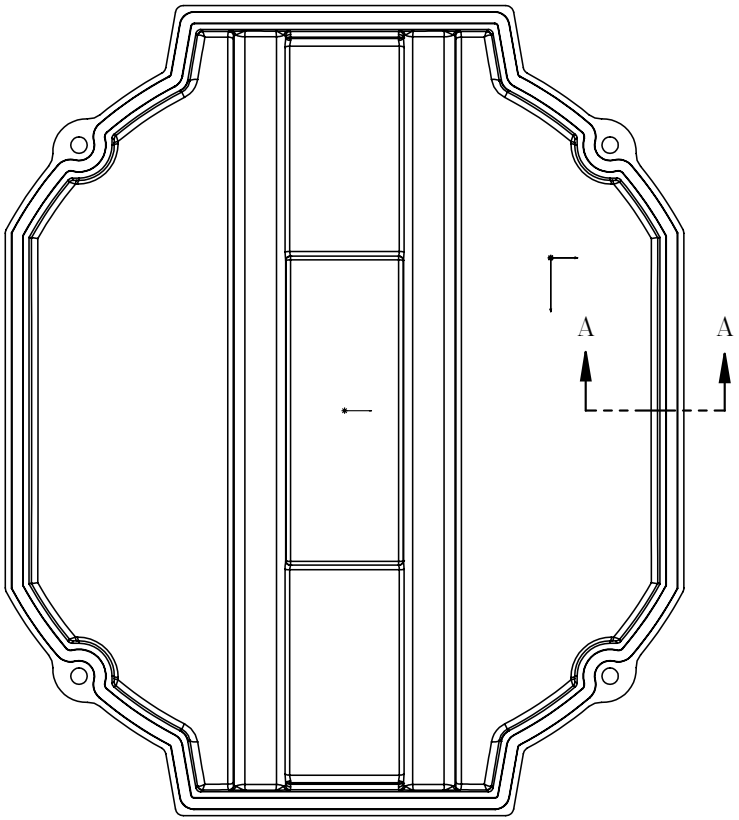

MATERIAL: RAMPF, RAKU-PUR 32-3280-51L

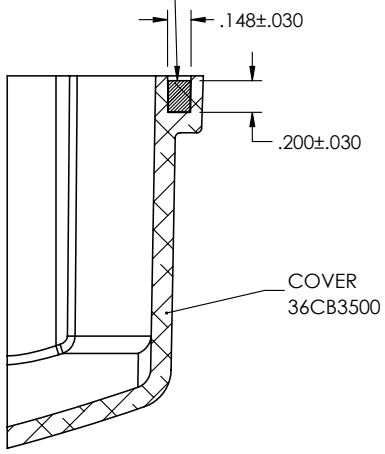

SECTION A–A

36CB3500A00

REV. DESC: UPDATE MATERIAL			
REV: A	VERSION: 01	REVISED: 10:45:08 03/29/2019	TDR: 000001101646
	MODEL NO. 36CB3500A00		REF: -
	BY: ENMARS0	Material: -	

BALDOR - RELIANCE®

36 FRAME ODE ECM COVER WITH FOAM SEAL

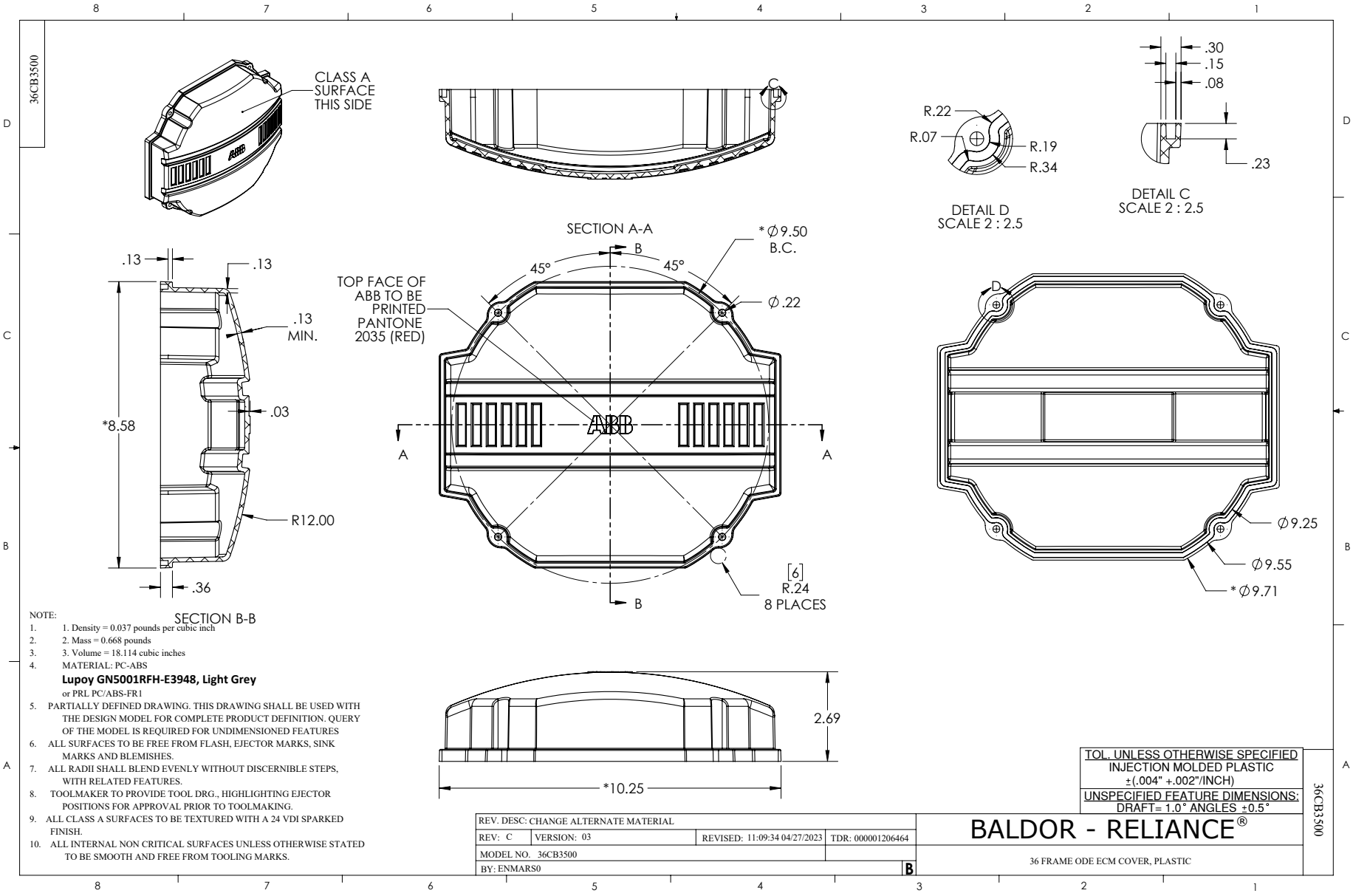

NOTE:
1. 1. Density = 0.037 pounds per cubic inch
2. 2. Mass = 0.668 pounds
3. 3. Volume = 18.114 cubic inches
4. MATERIAL: PC-ABS
   Lupoy GN5001RFH-E3948, Light Grey
   or PRL PC/ABS-FR1
5. PARTIALLY DEFINED DRAWING. THIS DRAWING SHALL BE USED WITH THE DESIGN MODEL FOR COMPLETE PRODUCT DEFINITION. QUERY OF THE MODEL IS REQUIRED FOR UNDIMENSIONED FEATURES
6. ALL SURFACES TO BE FREE FROM FLASH, EJECTOR MARKS, SINK MARKS AND BLEMISHES.
7. ALL RADII SHALL BLEND EVENLY WITHOUT DISCERNIBLE STEPS, WITH RELATED FEATURES.
8. TOOLMAKER TO PROVIDE TOOL DRG., HIGHLIGHTING EJECTOR POSITIONS FOR APPROVAL PRIOR TO TOOLMAKING.
9. ALL CLASS A SURFACES TO BE TEXTURED WITH A 24 VDI SPARKED FINISH.
10. ALL INTERNAL NON CRITICAL SURFACES UNLESS OTHERWISE STATED TO BE SMOOTH AND FREE FROM TOOLING MARKS.

REV. DESC: CHANGE ALTERNATE MATERIAL			
REV: C	VERSION: 03	REVISED: 11:09:34 04/27/2023	TDR: 000001206464
MODEL NO. 36CB3500			
BY: ENMARS0			B

TOL. UNLESS OTHERWISE SPECIFIED
INJECTION MOLDED PLASTIC
±(.004" +.002"/INCH)
UNSPECIFIED FEATURE DIMENSIONS:
DRAFT= 1.0° ANGLES ±0.5°

BALDOR - RELIANCE®

36 FRAME ODE ECM COVER, PLASTIC

36CB3500

CD0006

TYPICAL WYE–CONNECTED MOTOR

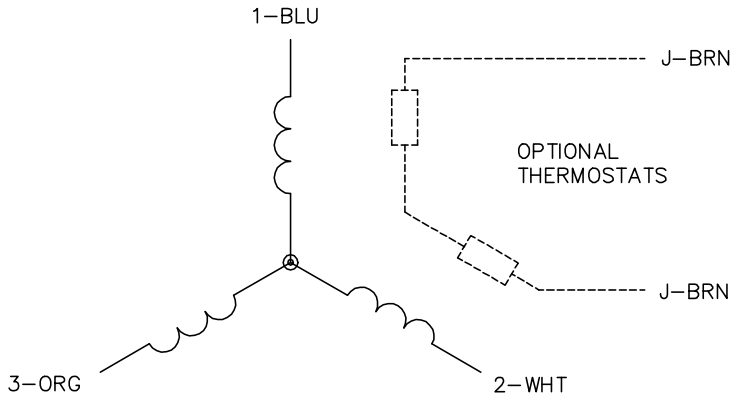

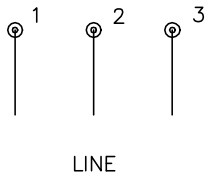

TYPICAL DELTA–CONNECTED MOTOR

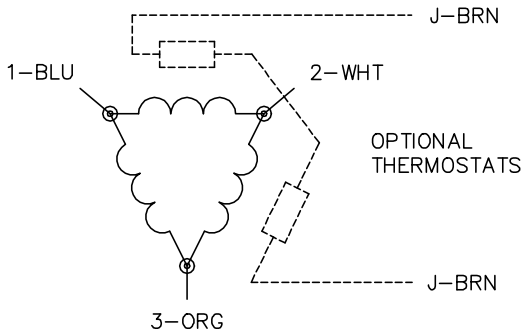

NOTES:

1. THREE LEAD MOTOR MAY BE EITHER WYE CONNECTED OR DELTA CONNECTED.
2. INTERCHANGE ANY TWO LINE LEADS TO REVERSE ROTATION.
3. OPTIONAL THERMOSTATS ARE PROVIDED WHEN SPECIFIED.
4. ACTUAL NUMBER OF INTERNAL PARALLEL CIRCUITS MAY VARY.
5. LEAD COLORS ARE OPTIONAL. LEADS MUST BE NUMBERED AS SHOWN.

CD0006

REV. DESC: ADD CLASS CONN00000007		
REV. LTR: E	VERSION: 01	TDR: 000001099922
FILE: \AAA\00005\141	REVISED: 10:24:49 02/19/2019	BY: ENBRIR0
MTL: –		

BALDOR - RELIANCE®

3PH, SV, 3 LEADS, WYE OR DELTA CONNECTED

SH 1 of 1