ABB BALDOR RELIANCE

Customer information packet

ECR91254T-4

125HP, 1785RPM, 3PH, 60HZ, 444T, A44078M, TEFC
Class - None
Division - Not Applicable

Copyright © All product information within this document is subject to ABB Motors and Mechanical Inc. copyright © protection, unless otherwise noted.
9/9/2026 1:38:02 PM

Specifications

Enclosure	TEFC
Frame	444T
Frame Material	Iron
Frequency	60.00 Hz
Haz Area Class and Group	None
Haz Area Division	Not Applicable
Motor Letter Type	Three Phase
Output @ Frequency	125.000 HP @ 60 HZ
Phase	3
Synchronous Speed @ Frequency	1800 RPM @ 60 HZ
Voltage @ Frequency	460.0 V @ 60 HZ
Agency Approvals	CURUSEEV
Ambient Temperature	40 °C
Auxiliary Box	NO AUXILLARY BOX
Base Indicator	Rigid
Bearing Grease Type	Polyrex EM (-20F +300F)
Constant Torque Speed Range	6-60
Current @ Voltage	149.000 A @ 460.0 V
Design Code	A
Drip Cover	No Drip Cover
Duty Rating	CONT
Efficiency @ 100% Load	95.4 %
Feedback Device	NO FEEDBACK
Heater Indicator	No Heater
High Voltage Full Load Amps	149.0 a
Insulation Class	F
Inverter Code	Inverter Ready
KVA Code	H
Lifting Lugs	Standard Lifting Lugs
Max Speed	3600 rpm
Motor Lead Quantity/Wire Size	3 @ 1/0 AWG
Motor Standards	NEMA

Part Detail

Revision	J
Type	AC
Mech. spec.	
Base	
Status	PRD/A
Elec. spec.	A44WG1492
Layout	617427-315
Eff. date	12-10-2025
CD Diagram	416820-036
Poles	04
Leads	3#1/0
Proprietary	False
Created date	01-30-2015

Motor Type	A44078M
Mounting Arrangement	F1
Number of Poles	4
Overall Length	44.75 IN
Power Factor	81
Product Family	Other
Pulley End Bearing Type	Ball
Pulley Face Code	Standard
Service Factor	1.15
Shaft Diameter	3.375 IN
Shaft Ground Indicator	No Shaft Grounding
Shaft Rotation	Reversible
Shaft Slinger Indicator	No Slinger
Speed	1785 rpm
Speed Code	Single Speed
Starting Method	Direct on line
Thermal Device - Bearing	None
Thermal Device - Winding	None

Nameplate

000613007PV													
CAT NO	ECR91254T-4			**SPEC NO.**	P44G1806								
HP	125	**AMPS**	149		**VOLTS**	460			**DESIGN**	A			
RPM	1785	**RPM MAX**	3600		**HZ**	60	**AMB**	40		**SF**	1.15		
D.E. BRG.DATA	6318			**O.D.E. BRG.DATA**	6318		**PH**	3	**DUTY**	CONT		**INSUL.CLASS**	F
FRAME	444T	**I.P.**	55	**TYPE**	P	**ENCL**	TEFC	**CODE**	H				
POWER FACTOR	81			**3/4 LOAD EFF.**	95.4			**NEMA NOM EFFICIENCY**	95.4				
CHP HZ	60-90	**CT HZ**	6-60		**VT HZ**	6-60							
SER.NO.				**MOTOR WEIGHT**									
	VPWM INVERTER DUTY												

NP2496L
MOBIL POLYREX EM

REL. S.O.	FRAME	HP	TYPE	PHASE/ HERTZ	RPM	VOLTS
	444T	125	P	3/60	1785	460

AMPS	DUTY	AMB °C/ INSUL.	S.F.	NEMA DESIGN	CODE LETTER	ENCL.
149	CONT	40/F	1.15	A	H	TEFC

E/S	ROTOR	TEST S.O.	TEST DATE	STATOR RES.@25 °C OHMS (BETWEEN LINES)
497776	418143052HE	---	---	.0315

PERFORMANCE

LOAD	HP	AMPERES	RPM	% POWER FACTOR	% EFFICIENCY
NO LOAD	0	53.5	1800	3.75	0
1/4	31.3	73.9	1797	42.8	92.6
2/4	62.5	93.9	1793	65.5	95.2
3/4	93.7	120	1790	76.3	95.6
4/4	125	151	1786	81.4	95.5
5/4	156	184	1782	83.8	95.1

SPEED TORQUE

	RPM	TORQUE % FULL LOAD	TORQUE LB.-FT.	AMPERES
LOCKED ROTOR	0	235	865	1005
PULL UP	1440	181	665	700
BREAKDOWN	1733	286	1051	524
FULL LOAD	1786	100	368	151

AMPERES SHOWN FOR 460. VOLT CONNECTION. IF OTHER VOLTAGE CONNECTIONS ARE AVAILABLE, THE AMPERES WILL VARY INVERSELY WITH THE RATED VOLTAGE

REMARKS: TYPICAL DATA

BALDOR

DR. BY W. L. SMITH
CK. BY J.J.HARRISON
APP. BY W. L. SMITH
DATE 07/13/10

A-C MOTOR PERFORMANCE DATA A44WG1492-R001
ISSUE DATE 12/18/10

ABB BALDOR RELIANCE

CUSTOMER INFORMATION PACKET ECR91254T-4 - 125HP, 1785RPM, 3PH, 60HZ, 444T, A44078M, TEFC

FRAME 444T	RPM 1785	S.F. 1.15	ROTOR 418143052HE
HP 125	VOLTS 460	NEMA DESIGN A	TEST S.O. TYPICAL DATA
TYPE P	AMPS 149	CODE LETTER H	TEST DATE ---
PHASE/HERTZ 3/60	DUTY CONT	ENCLOSURE TEFC	STATOR RES.@ 25 ℃ .0315
	AMB ℃/INSUL 40/F	E/S 497776	OHMS (BETWEEN LINES)

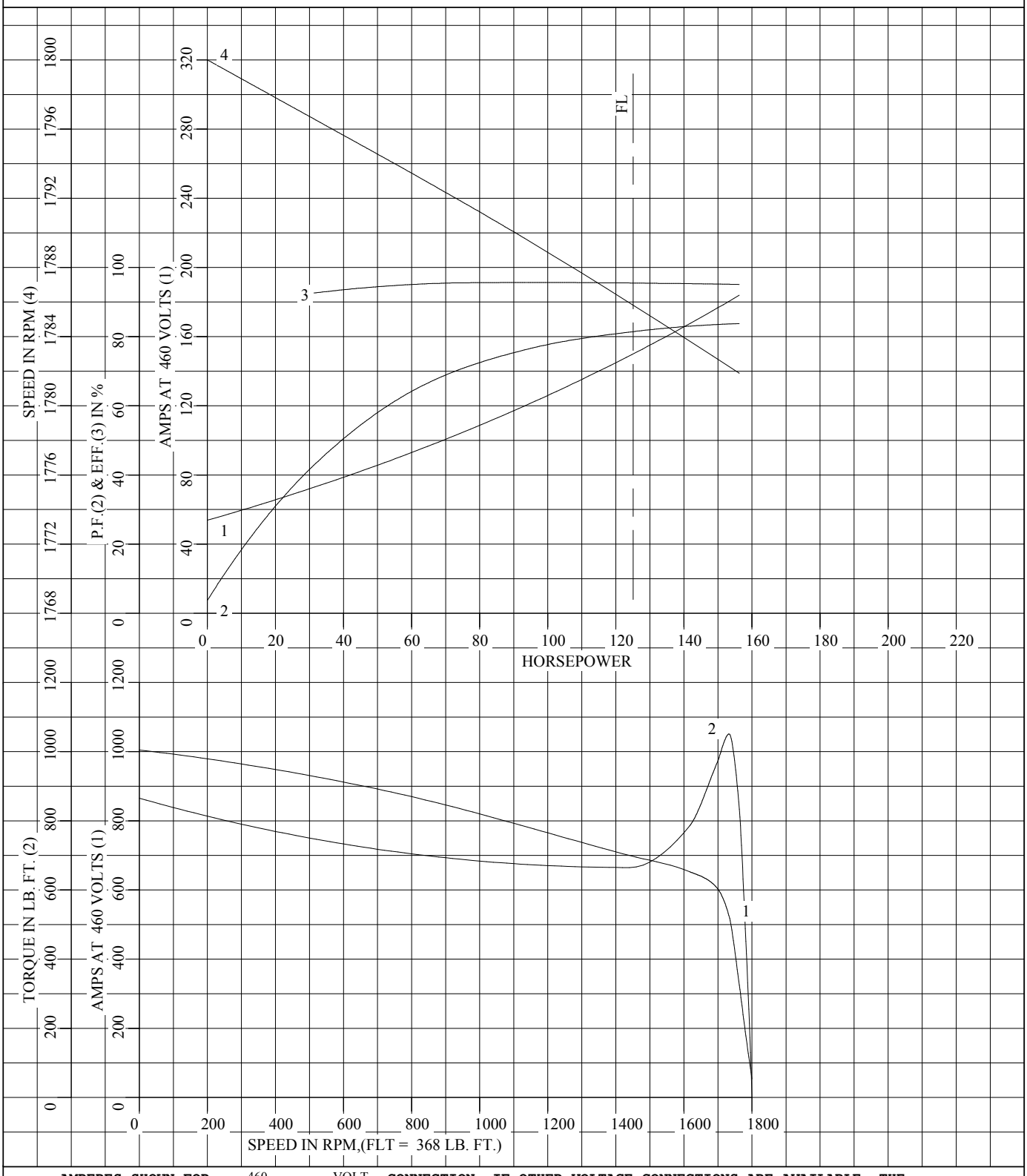

AMPERES SHOWN FOR 460 VOLT CONNECTION, IF OTHER VOLTAGE CONNECTIONS ARE AVAILABLE, THE AMPERES WILL VARY INVERSELY WITH THE RATED VOLTAGE.

BALDOR

DR. BY	W. L. SMITH
CK. BY	J.J.HARRISON
APP. BY	W. L. SMITH
DATE	07/13/10

A–C MOTOR PERFORMANCE CURVES A44WG1492-R001 ISSUE DATE 12/18/10

REL. S.O.	RPM 1785	S.F. 1.15	ROTOR 418143052HE
FRAME 444T	VOLTS 460	NEMA DESIGN A	TEST S.O. TYPICAL DATA
HP 125	AMPS 149	CODE LETTER H	TEST DATE ---
TYPE P	DUTY CONT	ENCLOSURE TEFC	STATOR RES.@ 25 ℃.0315
PHASE/HERTZ 3/60	AMB ℃/INSUL 40/F	E/S 497776	OHMS (BETWEEN LINES)

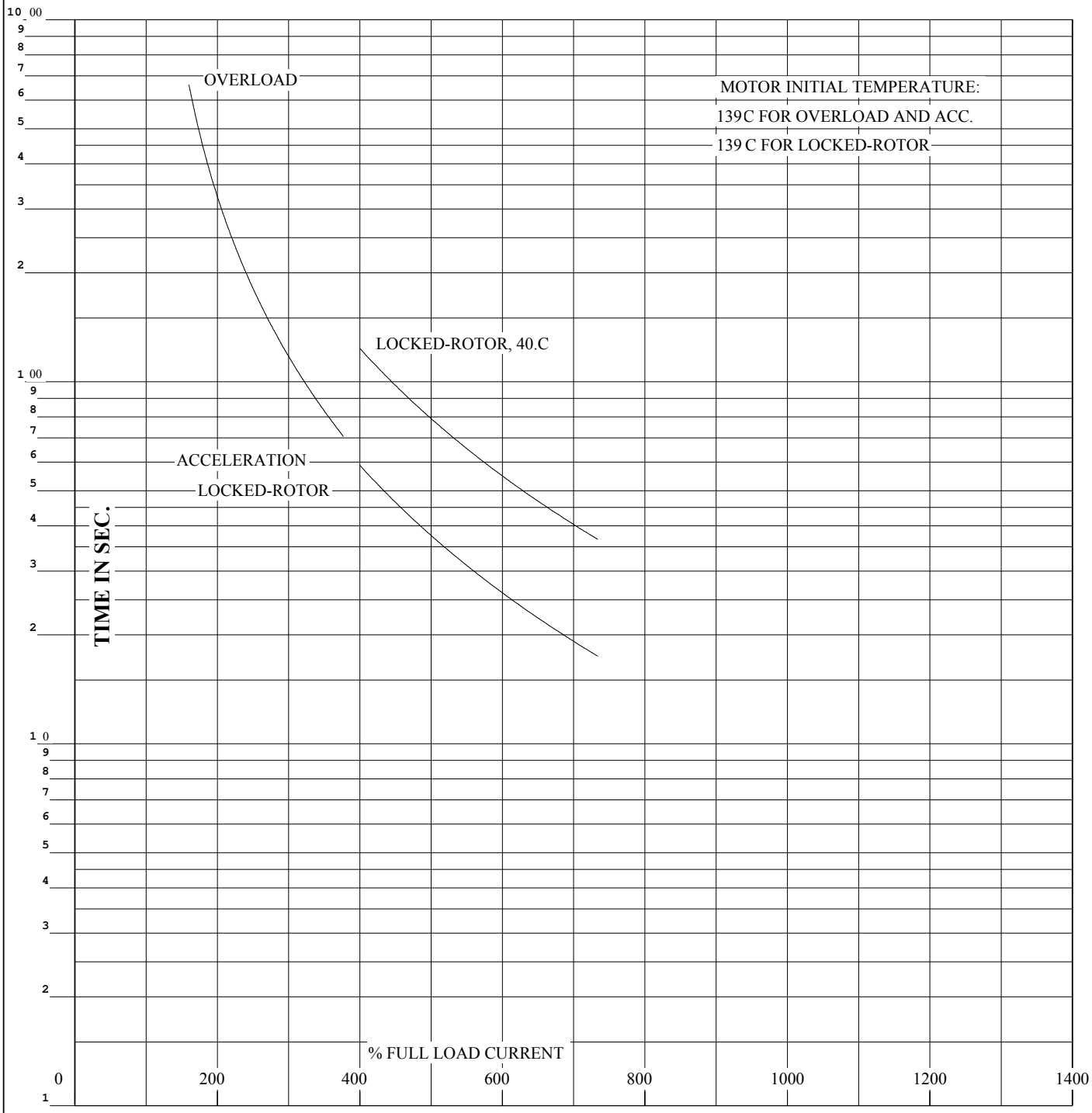

THERMAL LIMIT CURVE

REMARKS:

AMPERES SHOWN FOR 460 VOLT CONNECTION, IF OTHER VOLTAGE CONNECTIONS ARE AVAILABLE, THE AMPERES WILL VARY INVERSELY WITH THE RATED VOLTAGE.

BALDOR

DR. BY	W. L. SMITH
CK. BY	J.J.HARRISON
APP. BY	W. L. SMITH
DATE	07/13/10

A-C MOTOR PERFORMANCE CURVES A44WG1492-R001 ISSUE DATE 12/18/10

617427-315

DUTY MASTER ALTERNATING CURRENT MOTORS

SQUIRREL-CAGE INDUCTION

ENCLOSURE: TOTALLY ENCLOSED

MOUNTING: FOOT

COOLING: FAN COOLED

FRAMES G445T/444T

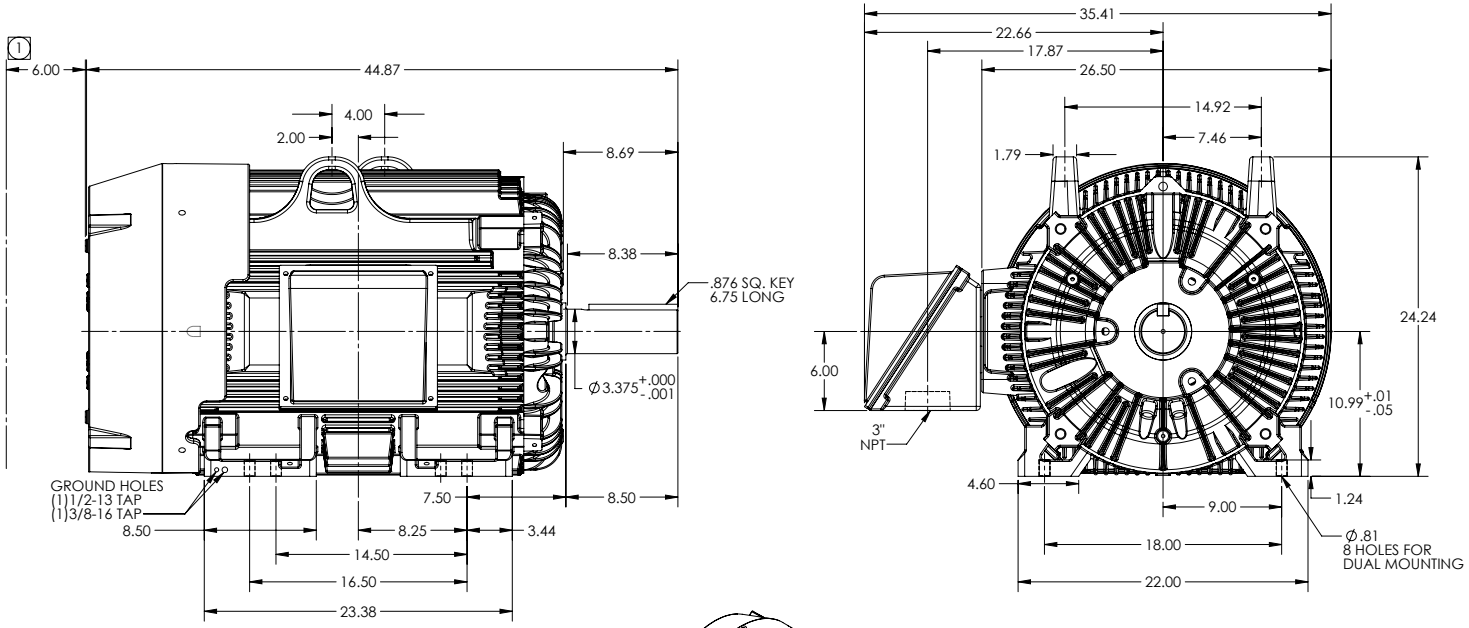

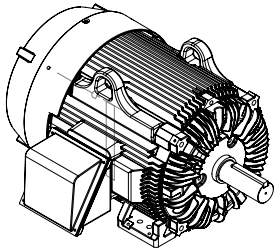

1 OBSTUCTION MUST NOT ENCROACH ON AIR INLET.

IF MOUNTING CLEARANCE DETAILS ARE REQUIRED, CONSULT FACTORY.

MAXIMUM PERMISSIBLE SHAFT RUNOUT WHEN MEASURED AT END OF STANDARD SHAFT EXTENSION IS .003" T.I.R.

CONDUIT BOX LOCATED ON OPPOSITE SIDE WHEN F-2, W-1, W-4, W-5, W-7, OR C-1 MOUNTING IS SPECIFIED

DIMENSIONS ARE IN INCHES FOR MILLIMETERS SEE SHEET (2)

CUSTOMER IS RESPONSIBLE FOR DETERMINING THAT MOTOR PERFORMANCE IS SUITABLE IN THE APPLICATION.

SHEET NUMBER 1 OF 2

617427-315

REV. DESC: NEW			
REV: -	VERSION: 00	REVISED: 09:06:36 12/05/2014	TDR: 000000881952
MODEL NO. 617427-315			
BY: RAGAJH			C

BALDOR

G445T/444T STD – FOOTED – SIDE/CENTER C.I. C/B ROLLER BRG

617427-315

617427-315

DUTY MASTER ALTERNATING CURRENT MOTORS

SQUIRREL-CAGE INDUCTION

ENCLOSURE: TOTALLY ENCLOSED

MOUNTING: FOOT

COOLING: FAN COOLED

FRAMES G445T/444T

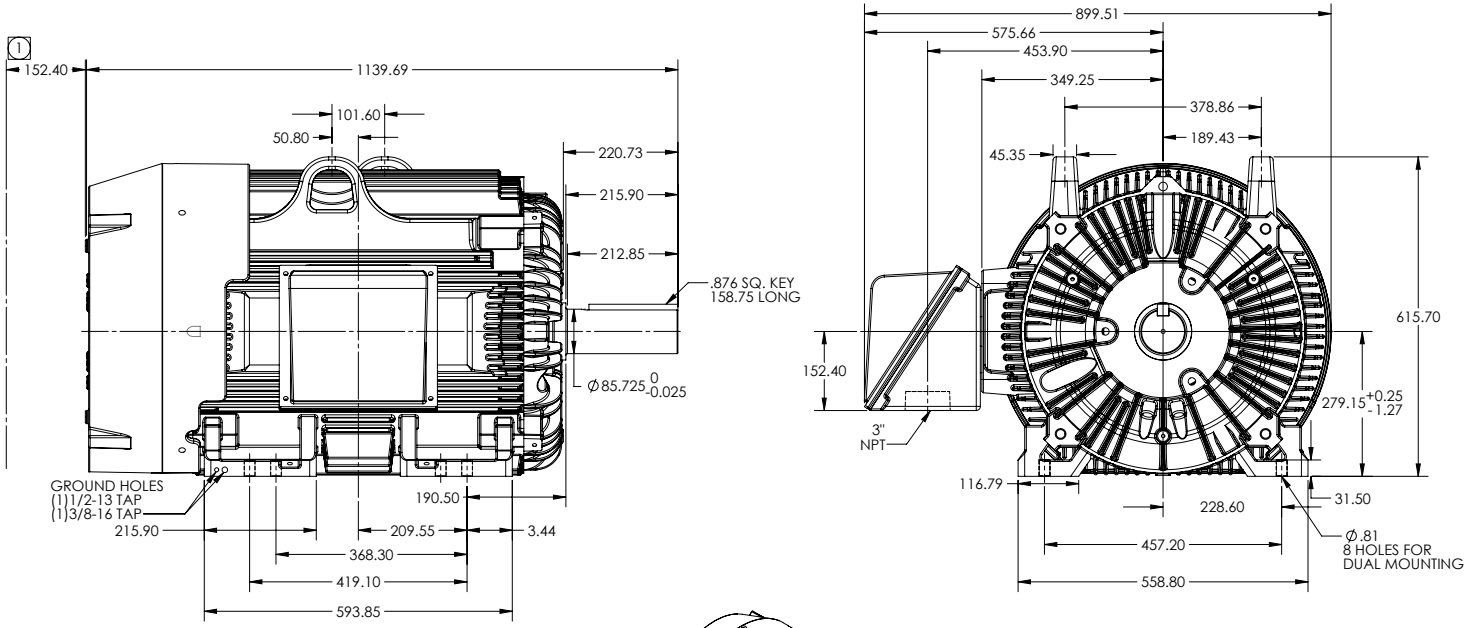

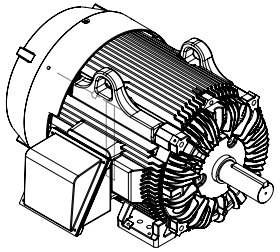

1 OBSTUCTION MUST NOT ENCROACH ON AIR INLET.

IF MOUNTING CLEARANCE DETAILS ARE REQUIRED, CONSULT FACTORY.

MAXIMUM PERMISSIBLE SHAFT RUNOUT WHEN MEASURED AT END OF STANDARD SHAFT EXTENSION IS .08 T.I.R.

CONDUIT BOX LOCATED ON OPPOSITE SIDE WHEN F-2, W-1, W-4, W-5, W-7, OR C-1 MOUNTING IS SPECIFIED

DIMENSIONS ARE IN MILLIMETERS FOR INCHES SEE SHEET 1

CUSTOMER IS RESPONSIBLE FOR DETERMINING THAT MOTOR PERFORMANCE IS SUITABLE IN THE APPLICATION.

SHEET NUMBER 2 OF 2

617427-315

REV. DESC: NEW			
REV: -	VERSION: 00	REVISED: 09:06:36 12/05/2014	TDR: 000000881952
MODEL NO. 617427-315			
BY: RAGAJH			C

BALDOR

G445T/444T STD – FOOTED – SIDE/CENTER C.I. C/B ROLLER BRG

617427-315

416820–036

A–C MOTOR
CONNECTION DIAGRAM
STANDARD 3 LEAD CONNECTED

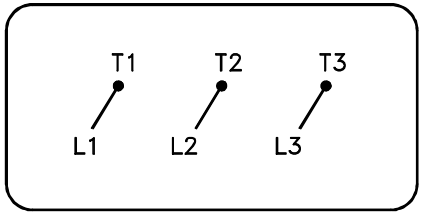

(N.P. 1575–BA)

416820–036

REV. DESC: LOADED TO BUS, C/R 335225			BALDOR
REV. LTR: –	VERSION: 00	TDR: 000000538207	
FILE: \MGA\00000\682		REVISED: 11:54:06 04/30/2010	CONN DIAG – STANDARD 3 LEAD
MTL: –		BY: RAGRA	SH 1 of 1