Customer information packet

ECR585006-PPN

M3BN 587MLB 6P 500HP

Copyright © All product information within this document is subject to ABB Motors and Mechanical Inc. copyright © protection, unless otherwise noted.
1/29/2026 2:06:12 PM

ABB Oy Motors & Generators	Classifying code or document type **PERFORMANCE DATA OF MOTOR**	ABB

Department/Author	Date of issue	Lang.	Rev. date	Our ref.
MLA000/TISA	11.3.2018	En		TMAA-ASUG9J-TISA22

Customer ref.	Saving Ident	Rev./Changed by	Pages
	TMAA-ASUG9J-TISA22	A	1/3

Driven Motor:

Catalog Number		**ECR585006-PPN**		
Motor type code		M3BN 587 MLB 6K		
Motor product code		3GBN983420-ADKBA04		
Motor type		Squirrel cage Motor		
Mounting designation		IM 1001 (B3)		
Protected by enclosure		IP66		
Method of cooling		TEFC		
Insulation		Class F (Shock Resistant)		
Service factor		SF1.15 TEMP RISE CLASS F		
Standards		NEMA		
International efficiency classification (IEC 60034-30)		IE3		
Ambient temperature, max.		40 °C		
Altitude, max.		3280 ft.a.s.l.		
Duty type		Continuous		
Temp. rise		Class B		
Connection of stator winding		Delta		
Rated output		500 HP		
Voltage		460 V		
Frequency		60 Hz		
Speed		1194 r/min		
Current		603 Amps		
Locked rotor Amps		720 %	Code H	
Locked rotor torque		220 %		
Breakdown torque		250 %		
No load current		229 Amps		
Rated torque		2200 lb-ft		
Load characteristics	Load %	Current Amps	Efficiency %	Power Factor
	100	603	95,8	0,81
	75	474	96,2	0,77
	50	359	95,9	0,68

Typical calculated values to NEMA. –

ABB Oy

Motors & Generators
Visiting Address
Strömbergin puistotie 5 A
VAASA
FINLAND

Postal Address
P.O.Box 633
FI-65101 VAASA
FINLAND

Telephone
+358 10 222 000

Telefax
+358 10 224 7372

We reserve all rights in this document and in the information contained therein. Reproduction, use or disclosure to third parties without express authority is strictly forbidden.
©Copyright 2013 ABB

BALDOR • RELIANCE CUSTOMER INFORMATION PACKET ECR585006-PPN - M3BN 587MLB 6P 500HP

ABB Oy Motors & Generators	Classifying code or document type **PERFORMANCE DATA OF MOTOR**	ABB

Department/Author	Date of issue	Lang.	Rev. date	Our ref.
MLA000/TISA	11.3.2018	En		TMAA-ASUG9J-TISA22

Customer ref.	Saving Ident	Rev./Changed by	Pages
	TMAA-ASUG9J-TISA22	A	2/3

Motor type code: M3BN 587 MLB 6K

Rated output	500 HP	Power Factor	0,81
Voltage	460 V	Rated torque	2200 lb-ft
Frequency	60 Hz	Locked rotor Amps	720 %
Speed	1194 r/min	Locked rotor torque	220 %
Current	603 Amps	Breakdown torque	250 %

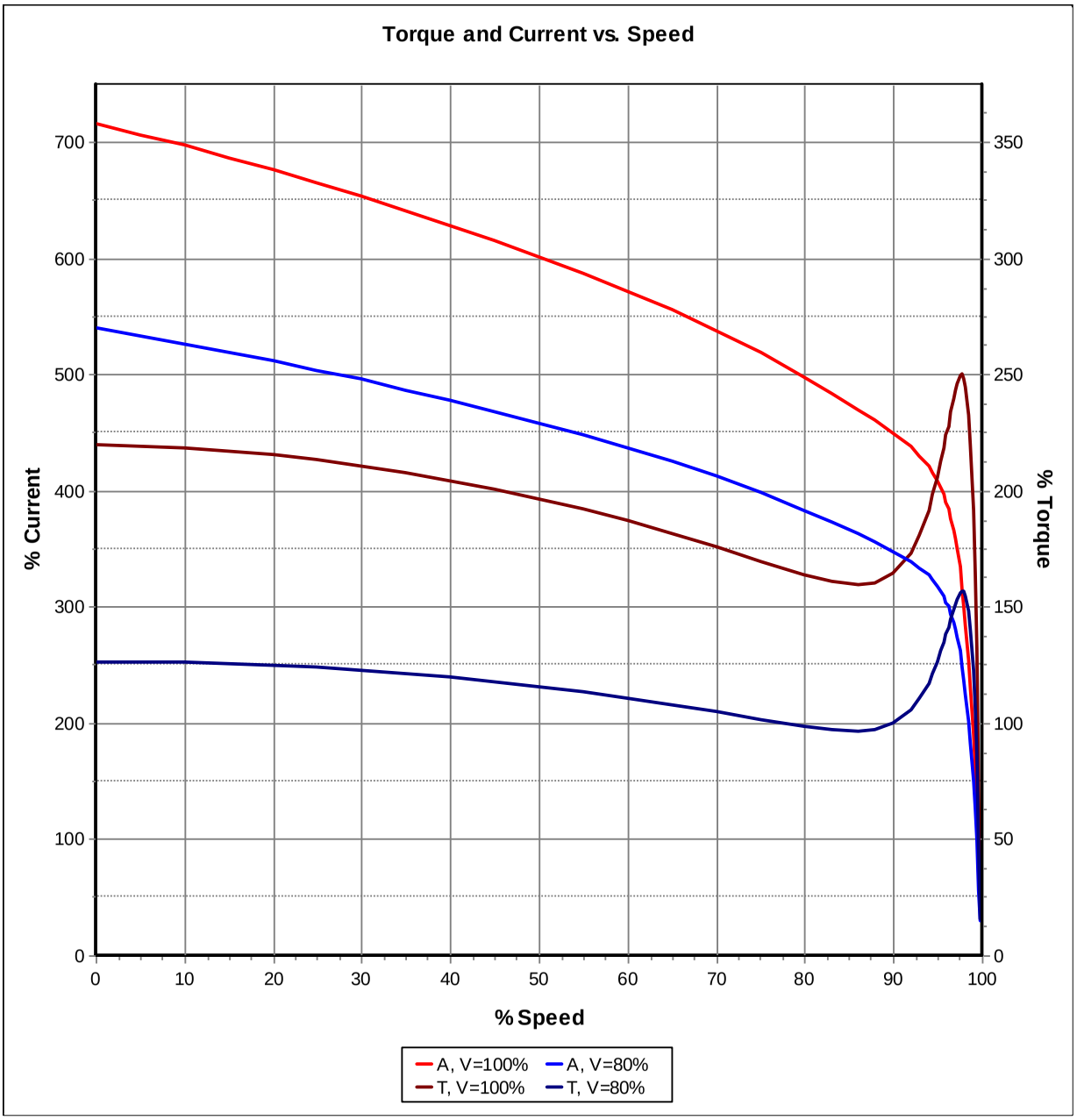

ABB Oy

Motors & Generators
Visiting Address
Strömbergin puistotie 5 A
VAASA
FINLAND

Postal Address
P.O.Box 633
FI-65101 VAASA
FINLAND

Telephone
+358 10 222 000

Telefax
+358 10 224 7372

We reserve all rights in this document and in the information contained therein. Reproduction, use or disclosure to third parties without express authority is strictly forbidden.
©Copyright 2013 ABB

BALDOR • RELIANCE CUSTOMER INFORMATION PACKET ECR585006-PPN - M3BN 587MLB 6P 500HP

PWM
Switch. freq. 3kHz
FWP 460VD 60Hz
VSD-duty: Temp. rise class F

Drive1

Rated power	125 HP
Rated voltage	117 V
Nominal frequency	15,3 Hz
Type of connection	Delta
Rated torque	2182 lb-ft
Speed	300 rpm
Current	603 Amps

Drive2

Rated power	500 HP
Rated voltage	460 V
Nominal frequency	60,4 Hz
Type of connection	Delta
Rated torque	2188 lb-ft
Speed	1200 rpm
Current	652 Amps

Constant torque 300 – 1200rpm

BALDOR • RELIANCE CUSTOMER INFORMATION PACKET ECR585006-PPN - M3BN 587MLB 6P 500HP

ABB Oy

Motors & Generators
Visiting Address
Strömbergin puistotie 5 A
VAASA
FINLAND

Postal Address
P.O.Box 633
FI-65101 VAASA
FINLAND

Telephone
+358 10 222 000

Telefax
+358 10 224 7372

We reserve all rights in this document and in the information contained therein. Reproduction, use or disclosure to third parties without express authority is strictly forbidden.
©Copyright 2013 ABB

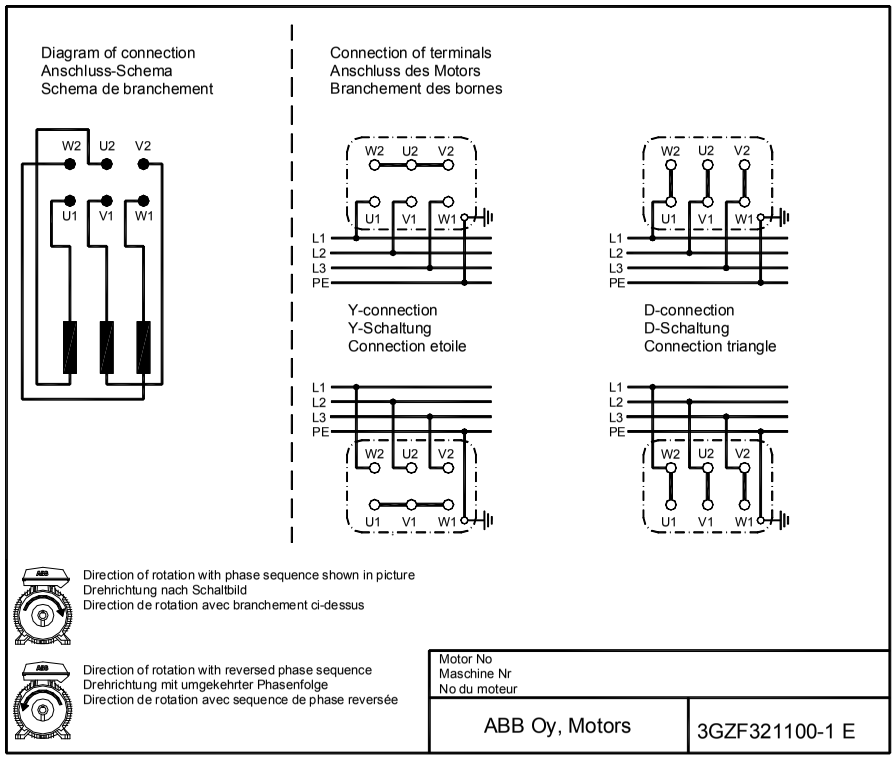

Connection Diagram			Document No: 3GZF321100-1 E
Description:	3-PHASE SQUIRREL-CAGE MOTOR		
Unit: Motors	Issued by: M Prusi	Replaces:	
Date: 21.09.2005	Approved by: Jari Raittila	Replaced by:	
ABB Oy	Customer Reference:		ABB

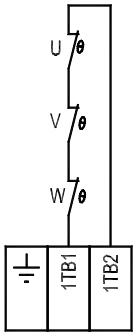

1TB1...1TB2 BIMETAL DETECTORS, TYPE NCC
BIMETALL-THERMOSCHALTER, TYP NCC
SONDES BIMETALLIQUES, TYPE NCC

Motor No
Maschine Nr
Moteur No

ABB Oy, Electrical Machines
LV Motors

3GZF321200-35 B

Accessory Connection Diagram	Document No: 3GZF321200-35 B
Description: BIMETAL DETECTORS	

Unit:	Electrical Machines, LV Motors	Issued by:	K.Högkvist	Replaces:
Date:	16.01.2002	Approved by:	M.Prusi	Replaced by:

ABB Oy	Customer Reference:	ABB

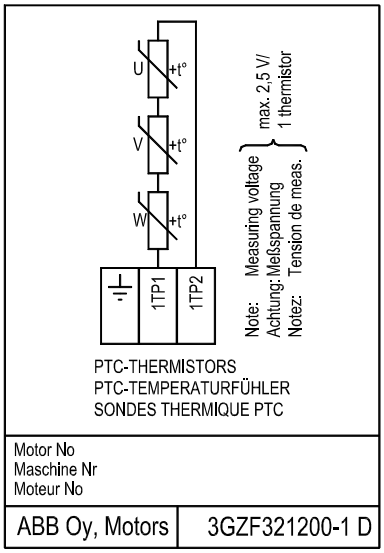

Accessory Connection Diagram			Document No: 3GZF321200-1 D
Description: PTC-THERMISTORS			
Unit: Motors	Issued by: K.Högkvist	Replaces:	
Date: 30.11.2005	Approved by: M.Prusi	Replaced by:	
ABB Oy	Customer Reference:		ABB

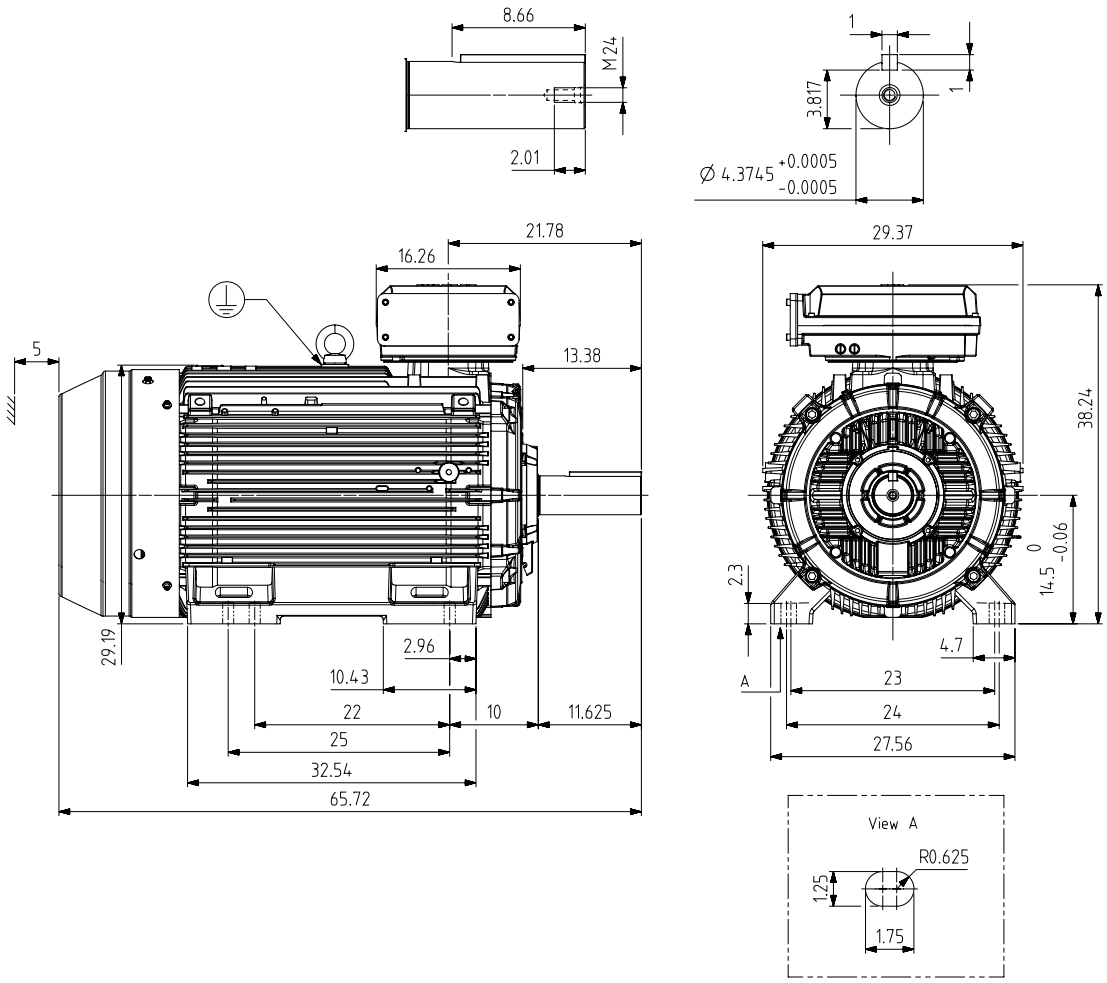

Additional information:

Dimension Print	Motor Type: M3BN 587ML_4.. B3, B6, B7, B8, V5, V6	Document No: 3GZF500098-174 A 14 BN 587 A
Description: SQUIRREL CAGE MOTOR, CABLE ENTRY LHS, SPECIAL SHAFT, SLOTTED FEET HOLES. DIMENSIONS IN INCHES, MOTOR SIZES 586/587.		

Unit:	ABB Oy, Motors and Generators	Issued by:	N.Palokangas	Replaces:
Date:	21.11.2019	Approved by:	S.Tikkanen	Replaced by:

ABB Oy	Customer Reference:	ABB