ABB BALDOR RELIANCE

Customer information packet

ECP84416T-4

200HP, 3600RPM, 3PH, 60HZ, 447TS, TEFC, FOOT,
Class - CLI GP A,B,C,D
Division - Division II

Copyright © All product information within this document is subject to ABB Motors and Mechanical Inc. copyright © protection, unless otherwise noted.
11/28/2026 6:33:18 AM

Specifications

Enclosure	TEFC
Frame	447TS
Frame Material	Iron
Frequency	60.00 Hz
Haz Area Class and Group	CLI GP A,B,C,D
Haz Area Division	Division II
Motor Letter Type	Three Phase
Output @ Frequency	200.000 HP @ 60 HZ
Phase	3
Synchronous Speed @ Frequency	3600 RPM @ 60 HZ
Voltage @ Frequency	460.0 V @ 60 HZ
Agency Approvals	UR
	CCSA US
Ambient Temperature	40 °C
Auxiliary Box	NO AUXILLARY BOX
Base Indicator	Rigid
Bearing Grease Type	Polyrex EM (-20F +300F)
Constant Torque Speed Range	30-60
Current @ Voltage	213.000 A @ 460.0 V
Design Code	B
Drip Cover	No Drip Cover
Duty Rating	CONT
Efficiency @ 100% Load	96.2 %
Enclosure Modification	841
Feedback Device	NO FEEDBACK
Haz Area Temp Code	T3
Heater Indicator	No Heater
High Voltage Full Load Amps	213.0 a
Insulation Class	F
Inverter Code	Inverter Ready
IP Rating	IP56
KVA Code	G

Part Detail

Revision	F
Type	AC
Mech. spec.	
Base	
Status	PRD/A
Elec. spec.	A44WG1504
Layout	617435-474
Eff. date	03-15-2024
CD Diagram	416820-036
Poles	02
Leads	3#1 (02 per group)
Proprietary	False
Created date	12-11-2018

Lifting Lugs	No Lifting Lugs
Motor Lead Quantity/Wire Size	6 @ 1 AWG
Motor Standards	None
Motor Type	A44104M
Mounting Arrangement	F1
No Load Current	41.6 a
Number of Poles	2
Overall Length	44.72 IN
Power Factor	91
Pulley End Bearing Type	Ball
Pulley Face Code	Standard
Service Factor	1.15
Shaft Diameter	2.375 IN
Shaft Ground Indicator	No Shaft Grounding
Shaft Rotation	Phase Seq-Std Rot (CCWODE)
Shaft Slinger Indicator	No Slinger
Speed	3570 rpm
Speed Code	Single Speed
Starting Method	Direct on line
Thermal Device - Bearing	None
Thermal Device - Winding	None

Nameplate

NP4566												
CAT NO	ECP84416T-4		**SPEC NO.**	A44-9097-1504								
HP	200	**AMPS**	213		**VOLTS**	460			**DESIGN**	B		
FRAME SIZE	447TS	**RPM**	3570	**HZ**	60	**AMB**	40	**SF**	1.15			
D.E. BRG.DATA	6313		**O.D.E. BRG.DATA**	6313		**PH**	3	**DUTY**	CONT	**INSUL.CLASS**	F	
D.E. BRG.	65BC03J30X		**TYPE**	**ENCL**	TEFC	**CODE**	G					
O.D.E. BRG.	65BC03J30X		**POWER FACTOR**	91				**NEMA-NOM-EFFICIENCY**	96.2			
3/4 LOAD EFF.	96.3	**IP**	56	**MAX CORR KVAR**	21.0			**GUARANTEED EFFICIENCY**	95.4			
TEMP CODE	T3	**TEMP =**	200									
CHP HZ	60-75	**CT HZ**	30-60	**VT HZ**	0-60							
INVERTER-TEMP-CODE	T3											
SER.NO.			**MOTOR WEIGHT**									

000613007EX					
CAT NO	ECP84416T-4	**SPEC NO.**	A44-9097-1504		
NO. ROTOR BARS	40	**GREASE TYPE**	POLYREX EM		
NO. SLOTS	48	**NL AMPS AT RATED VOLTAGE**		41.6	
5 YEAR WARRANTY		**WINDING RES @25 C**	.01446	**OHMS**	
MFG. DATE		**SER.NO**			

S/O	FRAME	HP	TYPE	PHASE/ HERTZ	RPM	VOLTS
	447TS	200	P	3/60	3570	460

AMPS	DUTY	AMB °C/ INSUL	S.F.	NEMA DESIGN	CODE LETTER	ENCLOSURE
213	CONT	40/F	1.15	B	G	TEFC

E/S	ROTOR	TEST S.O.	TEST DATE	STATOR RES. @25 °C OHMS (BETWEEN LINES)
833199	418143005AE	---	---	.0144

PERFORMANCE

LOAD	HP	AMPERES	RPM	% POWER FACTOR	% EFFICIENCY
NO LOAD	0	46.4	3600	5.92	0
1/4	50.0	78.6	3593	63.5	93.9
2/4	100	118	3586	82.6	96.0
3/4	150	164	3578	88.7	96.3
4/4	200	213	3571	91.1	96.2
5/4	250	265	3562	92.0	95.9

SPEED TORQUE

	RPM	TORQUE % FULL LOAD	TORQUE LB.-FT.	AMPERES
LOCKED ROTOR	0	151	444	1446
PULL UP	288	124	363	1331
BREAKDOWN	3462	281	825	730
FULL LOAD	3571	100	294	213

AMPERES SHOWN FOR 460 VOLT CONNECTION. IF OTHER CONNECTIONS ARE AVAILABLE, THE AMPERES WILL VARY INVERSELY WITH THE RATED VOLTAGE.

TYPICAL DATA

ABB	DRAWN BY: W. L. SMITH CHECKED BY: J.J.HARRISON APPROVED BY: W. L. SMITH DATE: 08/04/10	AC MOTOR PERFORMANCE DATA	A44WG1504-R001 DATE ISSUED 12/18/10

ABB BALDOR RELIANCE

CUSTOMER INFORMATION PACKET

FRAME 447TS	**RPM** 3570	**S.F.** 1.15	**ROTOR** 418143005AE
HP 200	**VOLTS** 460	**NEMA DESIGN** B	**TEST S.O.** TYPICAL DATA
TYPE P	**AMPS** 213	**CODE LETTER** G	**TEST DATE** ---
PHASE / HERTZ 3/60	**DUTY** CONT	**ENCLOSURE** TEFC	**STATOR RES. @ 25°C** .0144
	AMB °C / INSUL 40/F	**E/S** 833199	**OHMS (BETWEEN LINES)**

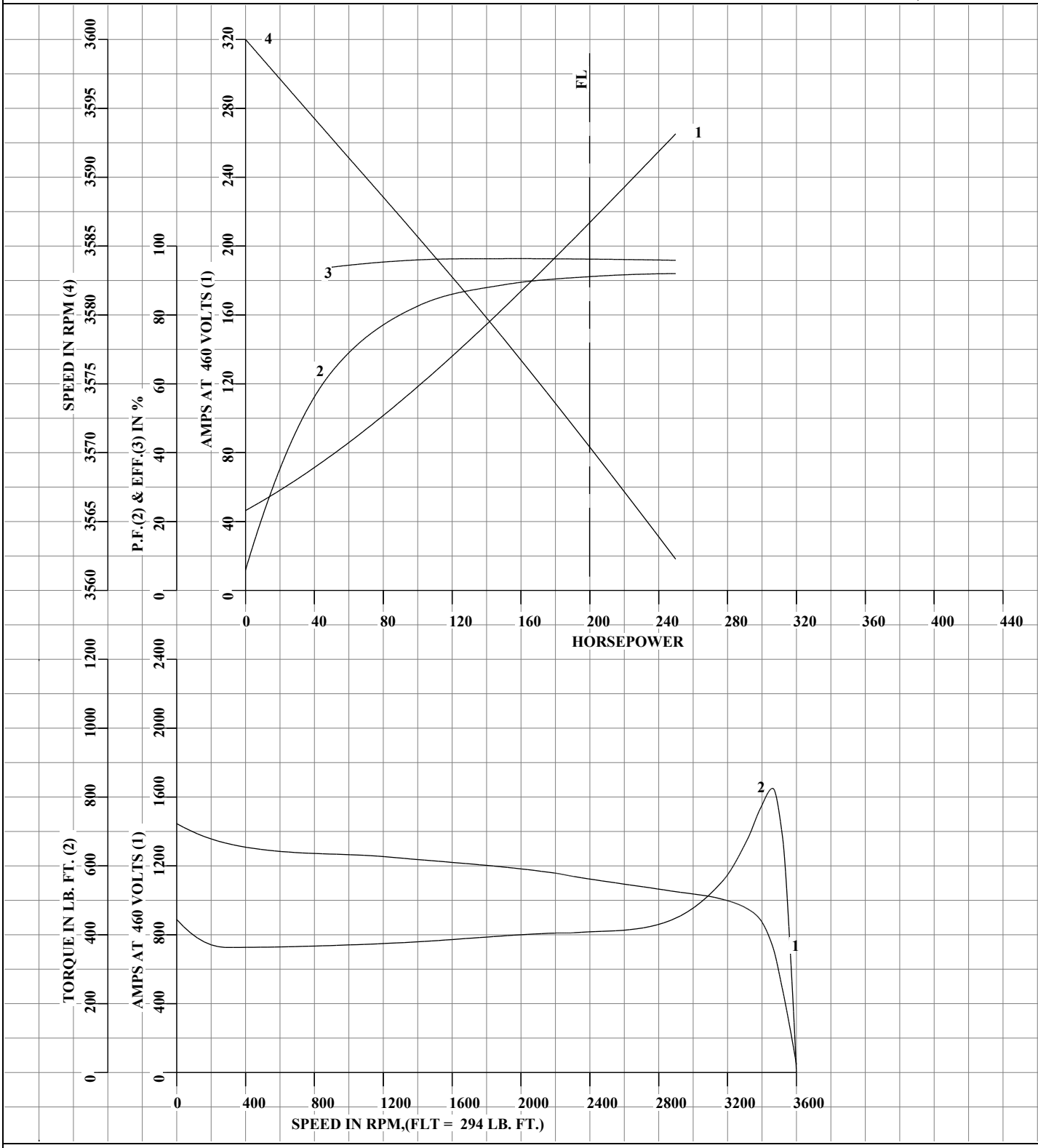

AMPERES SHOWN FOR 460 VOLT CONNECTION, IF OTHER VOLTAGE CONNECTIONS ARE AVAILABLE, THE AMPERES WILL VARY INVERSELY WITH THE RATED VOLTAGE.

ABB	DRAWN BY: W. L. SMITH CHECKED BY: J.J.HARRISON APPROVED BY: W. L. SMITH DATE: 08/04/10	AC MOTOR PERFORMANCE DATA	**A44WG1504-R001** ISSUE DATE 12/18/10

FRAME 447TS	RPM 3570	S.F. 1.15	ROTOR 418143005AE
HP 200	VOLTS 460	NEMA DESIGN B	TEST S.O. TYPICAL DATA
TYPE P	AMPS 213	CODE LETTER G	TEST DATE ---
PHASE / HERTZ 3/60	DUTY CONT	ENCLOSURE TEFC	STATOR RES. @ 25°C .0144
	AMB °C / INSUL 40/F	E/S 833199	OHMS (BETWEEN LINES)

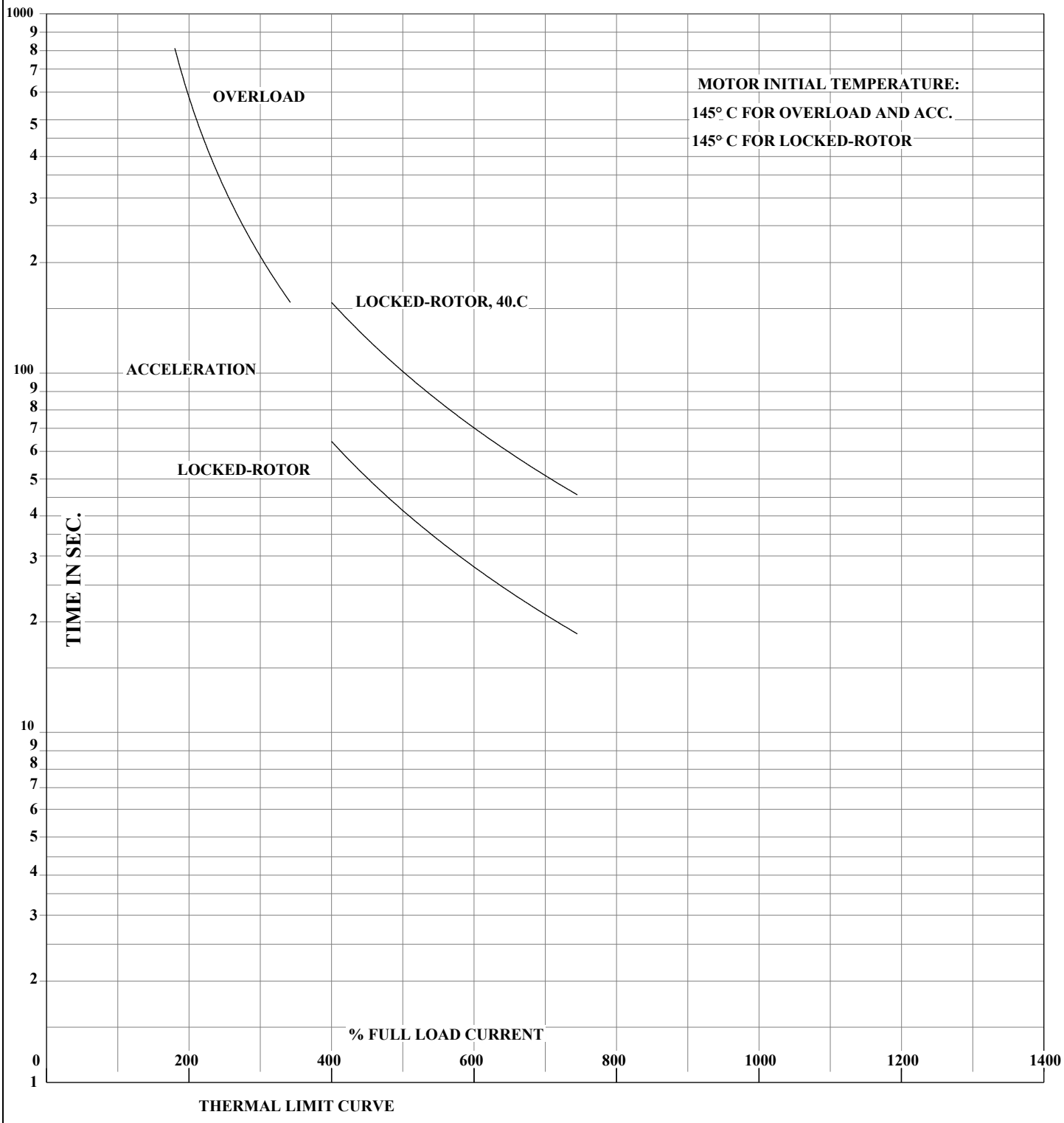

THERMAL LIMIT CURVE

AMPERES SHOWN FOR 460 VOLT CONNECTION, IF OTHER VOLTAGE CONNECTIONS ARE AVAILABLE, THE AMPERES WILL VARY INVERSELY WITH THE RATED VOLTAGE.

	DRAWN BY: W. L. SMITH CHECKED BY: J.J.HARRISON APPROVED BY: W. L. SMITH DATE: 08/04/10	AC MOTOR PERFORMANCE DATA	A44WG1504-R001 ISSUE DATE 12/18/10

SHEET NUMBER 1 OF 2

DUTY MASTER ALTERNATING CURRENT MOTORS

617435-474

ENCLOSURE: TOTALLY ENCLOSED | SQUIRREL-CAGE INDUCTION | COOLING: FAN COOLED

MOUNTING: FOOT, F-1 SIDE | G447TS/ G445TS FRAME MOUNTING HOLES | ENCLOSURE ENHANCEMENT: 841-XL

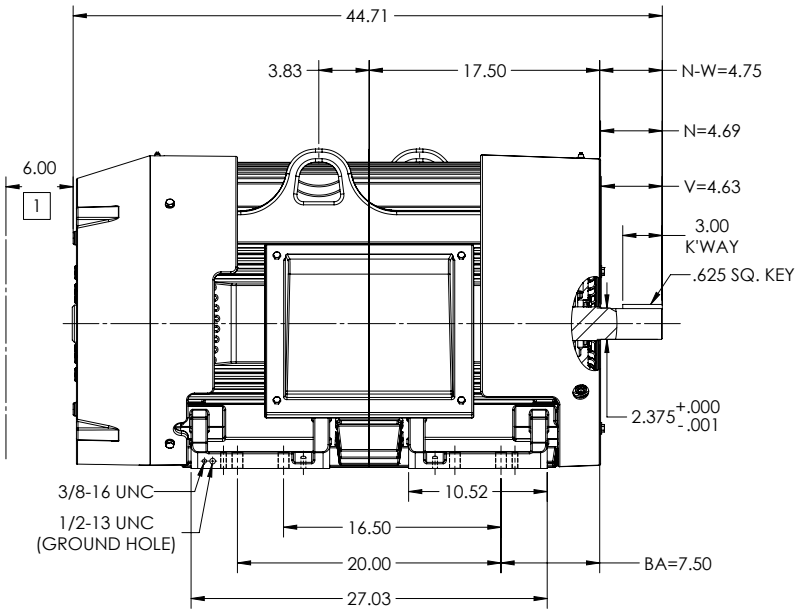

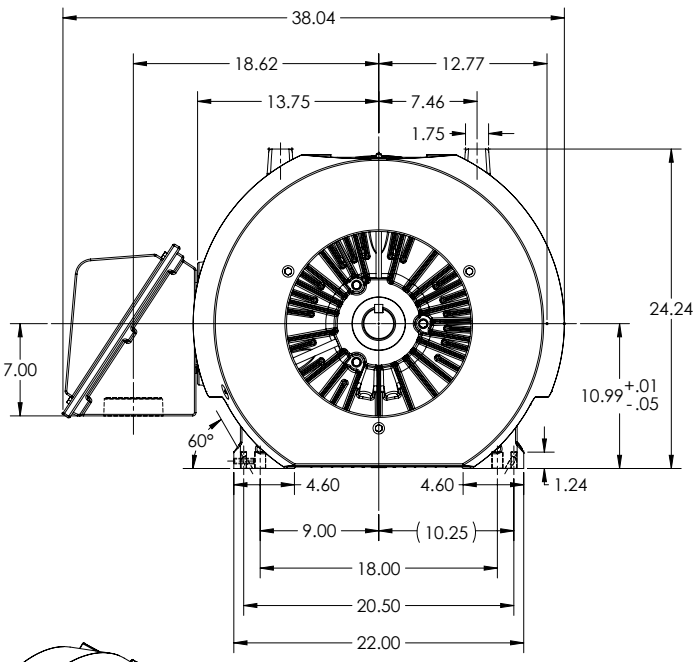

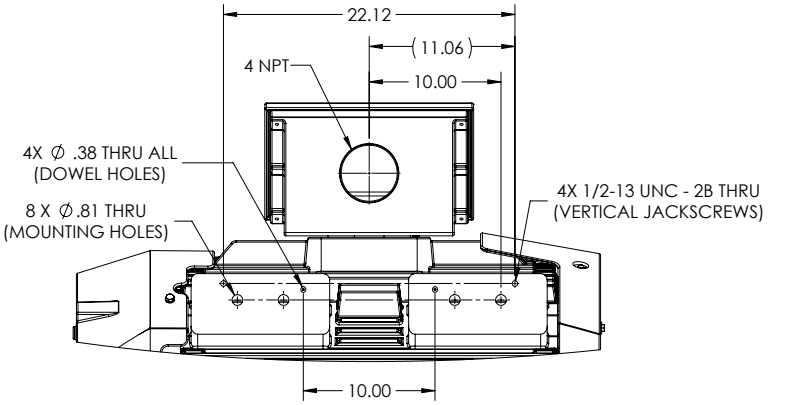

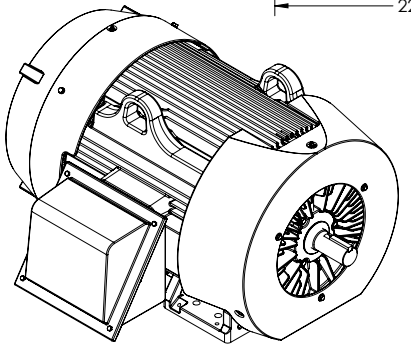

1 OBSTRUCTION MUST NOT ENCROACH ON AIR INLET.

IF MOUNTING CLEARANCE DETAILS ARE REQUIRED, CONSULT FACTORY.
MAX PERMISSIBLE SHAFT RUNOUT WHEN MEASURED AT END OF SHAFT EXTENSION IS .0015 T.I.R.

617435-474

DIMENSIONS ARE IN INCHES.
WEIGHT (LBS): 2515, MOTOR WEIGHTS MAY VARY BY 15% DEPENDING ON RATING.
CUSTOMER IS RESPONSIBLE FOR DETERMINING THAT MOTOR PERFORMANCE IS SUITABLE IN THE APPLICATION.

REV. DESC: UPDATE MODEL TO ADD EXTERNAL HARDWARE PER PROD MGM			
REV: B	VERSION: 02	REVISED: 04:41:43 10/03/2022	TDR: 000001196512
MODEL NO. 617435-474			REF:
BY: ENFRAJ0	Material:	C	

BALDOR

G447/445TS TEFC FOOT F1 CAST IRON BOX/JACKSCREWS/DOWEL PINS

617435-474

SHEET NUMBER 2 OF 2

DUTY MASTER ALTERNATING CURRENT MOTORS

617435-474

ENCLOSURE: TOTALLY ENCLOSED | SQUIRREL-CAGE INDUCTION | COOLING: FAN COOLED

MOUNTING: FOOT, F-1 SIDE | G447TS/ G445TS FRAME MOUNTING HOLES | ENCLOSURE ENHANCEMENT: 841-XL

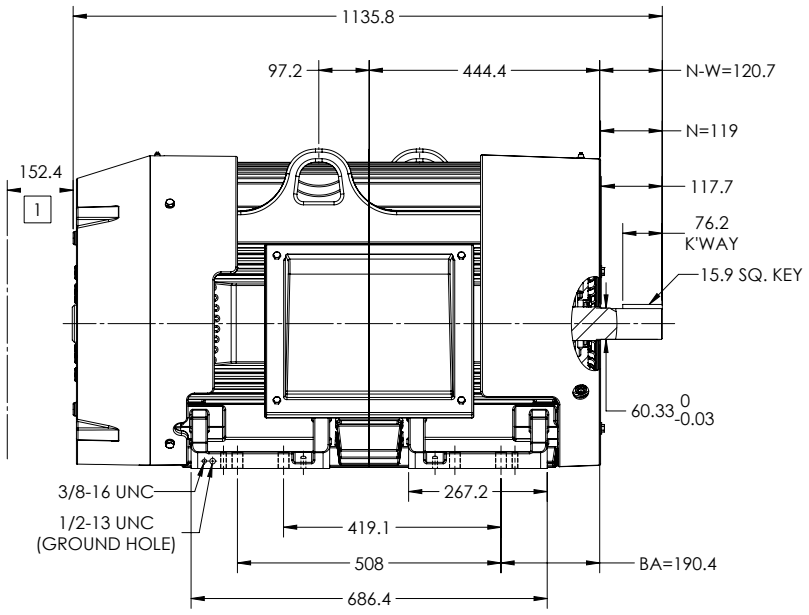

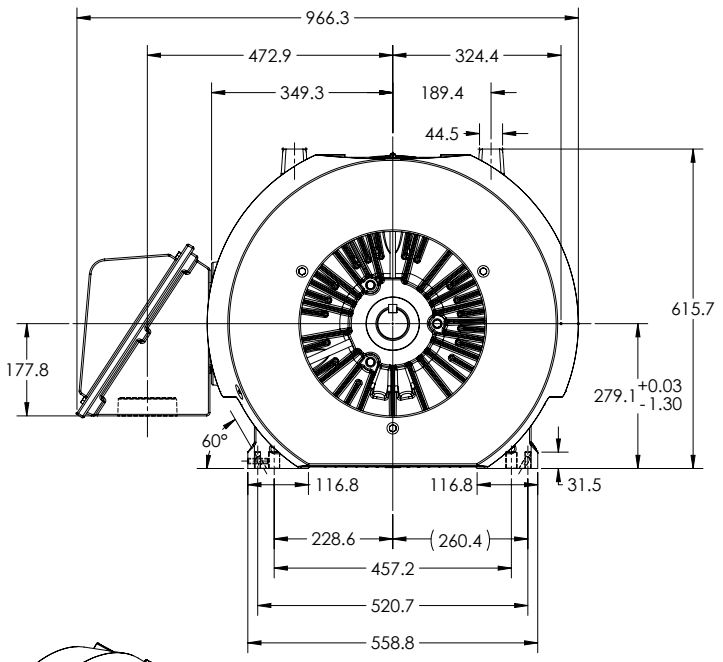

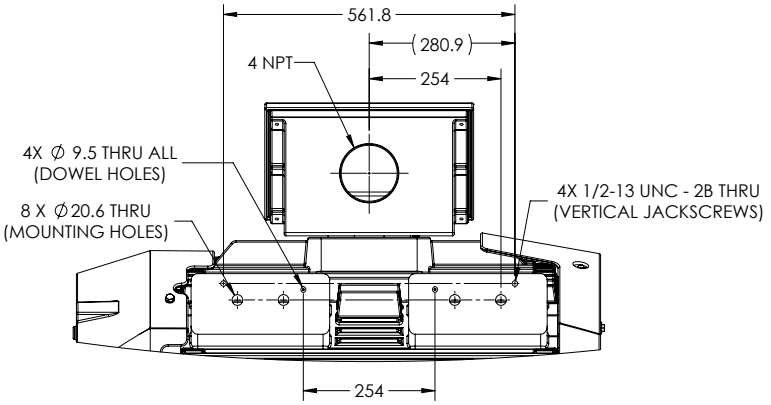

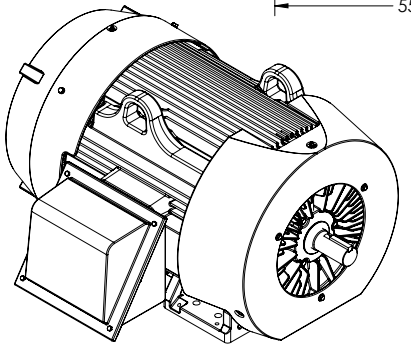

1 OBSTRUCTION MUST NOT ENCROACH ON AIR INLET.

IF MOUNTING CLEARANCE DETAILS ARE REQUIRED, CONSULT FACTORY.
MAX PERMISSIBLE SHAFT RUNOUT WHEN MEASURED AT END OF SHAFT EXTENSION IS .04 T.I.R.

617435-474

DIMENSIONS ARE IN MILLIMETERS.
WEIGHT (KGS): 1141, MOTOR WEIGHTS MAY VARY BY 15% DEPENDING ON RATING.
CUSTOMER IS RESPONSIBLE FOR DETERMINING THAT MOTOR PERFORMANCE IS SUITABLE IN THE APPLICATION.

REV. DESC: UPDATE MODEL TO ADD EXTERNAL HARDWARE PER PROD MGM			
REV: B	VERSION: 02	REVISED: 04:41:43 10/03/2022	TDR: 000001196512
MODEL NO. 617435-474			REF:
BY: ENFRAJ0	Material:		C

BALDOR

G447/445TS TEFC FOOT F1 CAST IRON BOX/JACKSCREWS/DOWEL PINS

617435-474

416820–036

A–C MOTOR
CONNECTION DIAGRAM
STANDARD 3 LEAD CONNECTED

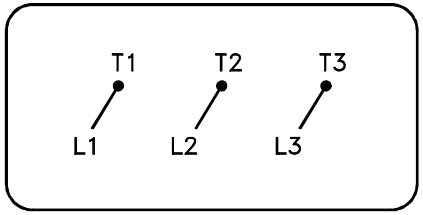

(N.P. 1575–BA)

416820–036

REV. DESC: LOADED TO BUS, C/R 335225			BALDOR
REV. LTR: –	VERSION: 00	TDR: 000000538207	
FILE: \MGA\00000\682		REVISED: 11:54:06 04/30/2010	CONN DIAG – STANDARD 3 LEAD
MTL: –		BY: RAGRA	SH 1 of 1