ABB BALDOR RELIANCE

Customer information packet

ECP84413T-4

150HP, 3570RPM, 3PH, 60HZ, 445TS, TEFC, F1
Class - CLI GP A,B,C,D
Division - Division II

Copyright © All product information within this document is subject to ABB Motors and Mechanical Inc. copyright © protection, unless otherwise noted.
11/28/2026 6:33:19 AM

Specifications

Enclosure	TEFC
Frame	445TS
Frame Material	Iron
Frequency	60.00 Hz
Haz Area Class and Group	CLI GP A,B,C,D
Haz Area Division	Division II
Motor Letter Type	Three Phase
Output @ Frequency	150.000 HP @ 60 HZ
Phase	3
Synchronous Speed @ Frequency	3600 RPM @ 60 HZ
Voltage @ Frequency	460.0 V @ 60 HZ
Agency Approvals	UR
	CCSA US
Ambient Temperature	40 °C
Auxiliary Box	NO AUXILLARY BOX
Base Indicator	Rigid
Bearing Grease Type	Polyrex EM (-20F +300F)
Constant Torque Speed Range	10-60
Current @ Voltage	164.000 A @ 460.0 V
Design Code	B
Drip Cover	No Drip Cover
Duty Rating	CONT
Efficiency @ 100% Load	95.0 %
Enclosure Modification	841
Feedback Device	NO FEEDBACK
Haz Area Temp Code	T3
Heater Indicator	No Heater
High Voltage Full Load Amps	164.0 a
Insulation Class	F
Inverter Code	Inverter Ready
IP Rating	IP56
KVA Code	G

Part Detail

Revision	E
Type	AC
Mech. spec.	
Base	
Status	PRD/A
Elec. spec.	A44WG3535
Layout	617434-659
Eff. date	12-11-2023
CD Diagram	416820-036
Poles	02
Leads	3#2 (02 per group)
Proprietary	False
Created date	12-12-2018

Lifting Lugs	Standard Lifting Lugs
Motor Lead Quantity/Wire Size	6 @ 2 AWG
Motor Standards	None
Motor Type	A4478M
Mounting Arrangement	F1
No Load Current	34.7 a
Number of Poles	2
Overall Length	41.22 IN
Power Factor	90
Pulley End Bearing Type	Ball
Pulley Face Code	Standard
Service Factor	1.15
Shaft Diameter	2.375 IN
Shaft Ground Indicator	No Shaft Grounding
Shaft Rotation	Reversible
Shaft Slinger Indicator	No Slinger
Speed	3570 rpm
Speed Code	Single Speed
Starting Method	Direct on line
Thermal Device - Bearing	None
Thermal Device - Winding	None

Nameplate

NP4566												
CAT NO	ECP84413T-4		**SPEC NO.**	A44-8878-3535								
HP	150	**AMPS**	164		**VOLTS**	460			**DESIGN**	B		
FRAME SIZE	445TS	**RPM**	3570	**HZ**	60	**AMB**	40	**SF**	1.15			
D.E. BRG.DATA	6313		**O.D.E. BRG.DATA**	6313		**PH**	3	**DUTY**	CONT	**INSUL.CLASS**	F	
D.E. BRG.	65BC03J30X		**TYPE**	**ENCL**	TEFC	**CODE**	G					
O.D.E. BRG.	65BC03J30X		**POWER FACTOR**	90				**NEMA-NOM-EFFICIENCY**	95			
3/4 LOAD EFF.	95.3	**IP**	56		**MAX CORR KVAR**	20.0		**GUARANTEED EFFICIENCY**	94.1			
TEMP CODE	T3	**TEMP =**	200									
CHP HZ	60-75	**CT HZ**	10-60	**VT HZ**	0-60							
INVERTER-TEMP-CODE	T3											
SER.NO.			**MOTOR WEIGHT**									

000613007EX					
CAT NO	ECP84413T-4	**SPEC NO.**	A44-8878-3535		
NO. ROTOR BARS	40	**GREASE TYPE**	POLYREX EM		
NO. SLOTS	48	**NL AMPS AT RATED VOLTAGE**		34.7	
5 YEAR WARRANTY		**WINDING RES @25 C**	.02926	**OHMS**	
MFG. DATE		**SER.NO**			
	SFA 188				

REL. S.O.	FRAME	HP	TYPE	PHASE/ HERTZ	RPM	VOLTS
	445TS	150	P	3/60	3570	460

AMPS	DUTY	AMB °C/ INSUL.	S.F.	NEMA DESIGN	CODE LETTER	ENCL.
164	CONT	40/F	1.15	B	G	TEFC

E/S	ROTOR	TEST S.O.	TEST DATE	STATOR RES.@25 °C OHMS (BETWEEN LINES)
0	0	---	---	.0292

PERFORMANCE

LOAD	HP	AMPERES	RPM	% POWER FACTOR	% EFFICIENCY
NO LOAD	0	34.7	3600	6.89	0
1/4	37.5	59.2	3593	63.9	92.9
2/4	75.1	90.3	3585	81.7	95.3
3/4	113	125	3578	87.8	95.7
4/4	150	164	3570	89.9	95.6
5/4	187	204	3562	90.4	95.2

SPEED TORQUE

	RPM	TORQUE % FULL LOAD	TORQUE LB.-FT.	AMPERES
LOCKED ROTOR	0	138	304	1081
PULL UP	288	110	242	997
BREAKDOWN	3461	280	618	552
FULL LOAD	3570	100	221	164

AMPERES SHOWN FOR 460. VOLT CONNECTION. IF OTHER VOLTAGE CONNECTIONS ARE AVAILABLE, THE AMPERES WILL VARY INVERSELY WITH THE RATED VOLTAGE

REMARKS: TYPICAL DATA
NEMA NOMINAL EFFICIENCY = 95.0 PCT.

BALDOR
A MEMBER OF THE ABB GROUP

DR. BY CD
CK. BY CD
APP. BY R. MCELVEEN
DATE 1/18/11

A-C MOTOR PERFORMANCE DATA

A44WG3535-R003
ISSUE DATE 02/27/19

REL S.O.		RPM	3570	S.F.	1.15	ROTOR	0
FRAME	445TS	VOLTS	460	NEMA DESIGN	B	TEST S.O.	TYPICAL DATA
HP	150	AMPS	164	CODE LETTER	G	TEST DATE	---
TYPE	P	DUTY	CONT	ENCLOSURE	TEFC	STATOR RES.@ 25 °C	.0292
PHASE/HERTZ	3/60	AMB °C/INSUL	40/F	E/S	0		OHMS (BETWEEN LINES)

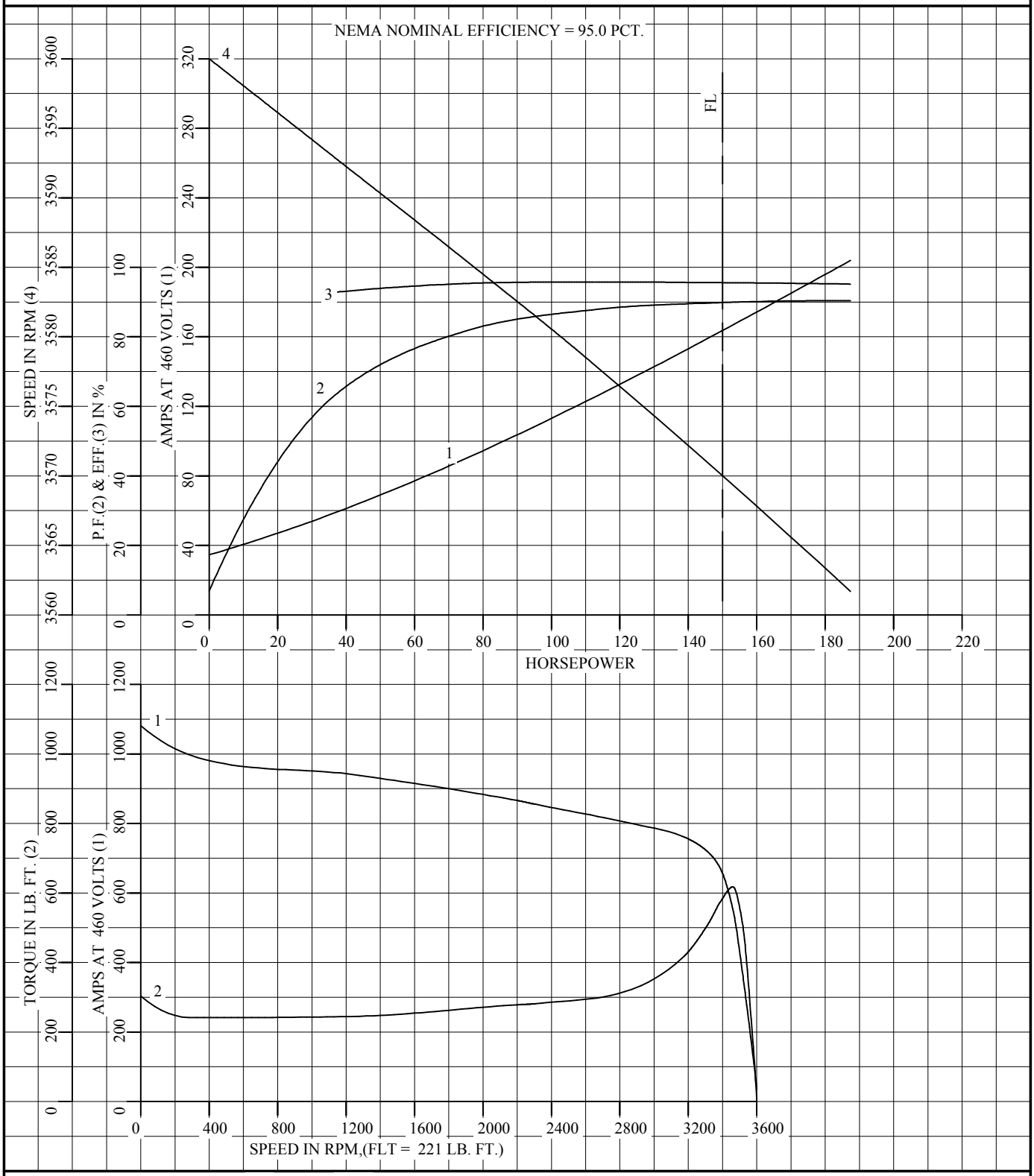

AMPERES SHOWN FOR 460 VOLT CONNECTION, IF OTHER VOLTAGE CONNECTIONS ARE AVAILABLE, THE AMPERES WILL VARY INVERSELY WITH THE RATED VOLTAGE.

BALDOR
A MEMBER OF THE ABB GROUP

DR. BY	CD
CK. BY	CD
APP. BY	R. MCELVEEN
DATE	1/18/11

A-C MOTOR PERFORMANCE CURVES

A44WG3535-R003

ISSUE DATE 02/27/19

REL. S.O.	RPM 3570	S.F. 1.15	ROTOR 0
FRAME 445TS	VOLTS 460	NEMA DESIGN B	TEST S.O. TYPICAL DATA
HP 150	AMPS 164	CODE LETTER G	TEST DATE ---
TYPE P	DUTY CONT	ENCLOSURE TEFC	STATOR RES.@ 25 ℃.0292
PHASE/HERTZ 3/60	AMB ℃/INSUL 40/F	E/S 0	OHMS (BETWEEN LINES)

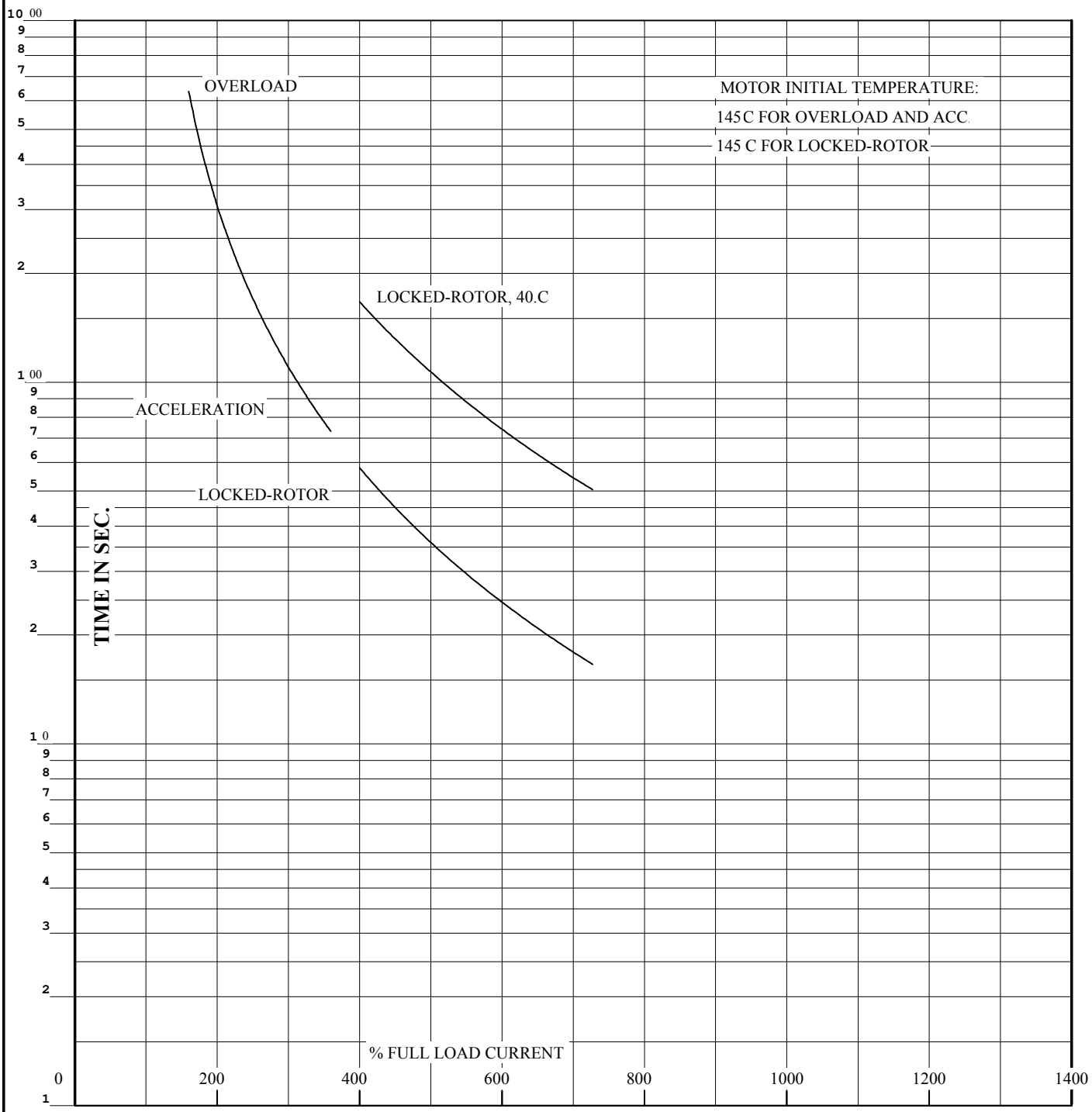

THERMAL LIMIT CURVE

REMARKS: NEMA NOMINAL EFFICIENCY = 95.0 PCT.

AMPERES SHOWN FOR 460 VOLT CONNECTION, IF OTHER VOLTAGE CONNECTIONS ARE AVAILABLE, THE AMPERES WILL VARY INVERSELY WITH THE RATED VOLTAGE.

BALDOR A MEMBER OF THE ABB GROUP

DR. BY	CD
CK. BY	CD
APP. BY	R. MCELVEEN
DATE	1/18/11

A–C MOTOR PERFORMANCE CURVES

A44WG3535-R003

ISSUE DATE 02/27/19

Printed on 2/27/19 9:04 @ bengap01.bal

SHEET NUMBER 1 OF 2

DUTY MASTER ALTERNATING CURRENT MOTORS

617434-659

ENCLOSURE: TOTALLY ENCLOSED | SQUIRREL-CAGE INDUCTION | COOLING: FAN COOLED

MOUNTING: FOOT, F-1 SIDE | G444TS/G445TS FRAME MOUNTING HOLES | ENCLOSURE ENHANCEMENT: 841-XL

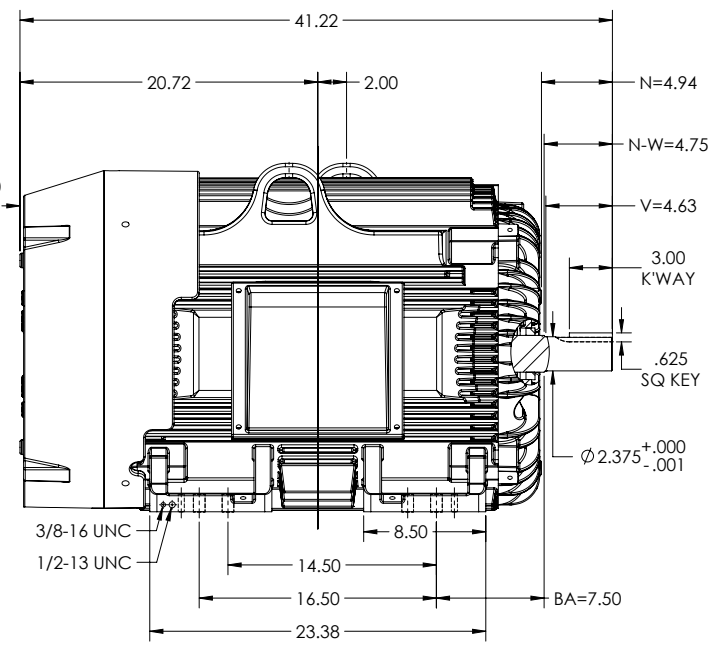

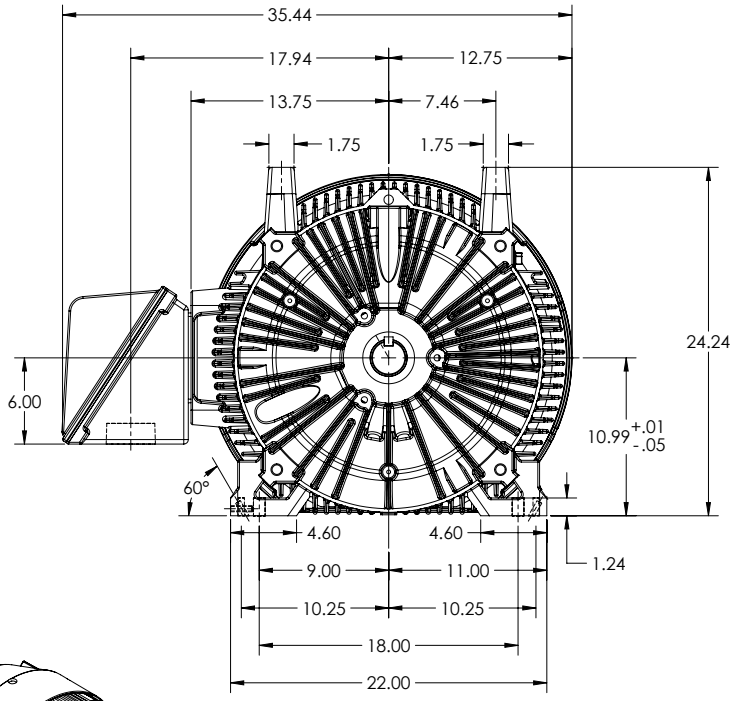

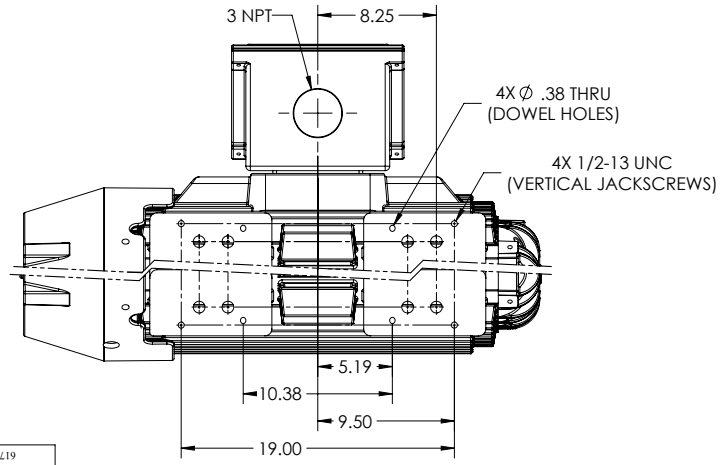

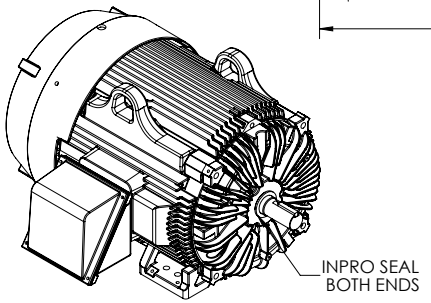

1 OBSTRUCTION MUST NOT ENCROACH ON AIR INLET.

DIMENSIONS ARE IN INCHES.
WEIGHT (LBS): 2130 ±15% DEPENDING ON RATING.
IF MOUNTING CLEARANCE DETAILS ARE REQUIRED, CONSULT FACTORY.
CUSTOMER IS RESPONSIBLE FOR DETERMINING THAT MOTOR PERFORMANCE IS SUITABLE IN THE APPLICATION.
MAXIMUM PERMISSIBLE SHAFT RUNOUT WHEN MEASURED AT END OF STANDARD SHAFT EXTENSION IS .0015" T.I.R.

REV. DESC: NEW DRAWING			
REV: -	VERSION: 00	REVISED: 01:22:33 12/17/2018	TDR: 000001093408
MODEL NO. 617434-659			REF: -
BY: USJEDIL	Material: _	C	G445/444TS TEFC F1 FOOT CI C/BOX/JACKSCREW/DOWEL PINS/INPROS

BALDOR

617434-659

617434-659

SHEET NUMBER 2 OF 2

DUTY MASTER ALTERNATING CURRENT MOTORS

617434-659

ENCLOSURE: TOTALLY ENCLOSED | SQUIRREL-CAGE INDUCTION | COOLING: FAN COOLED

MOUNTING: FOOT, F-1 SIDE | G444TS/G445TS FRAME MOUNTING HOLES | ENCLOSURE ENHANCEMENT: 841-XL

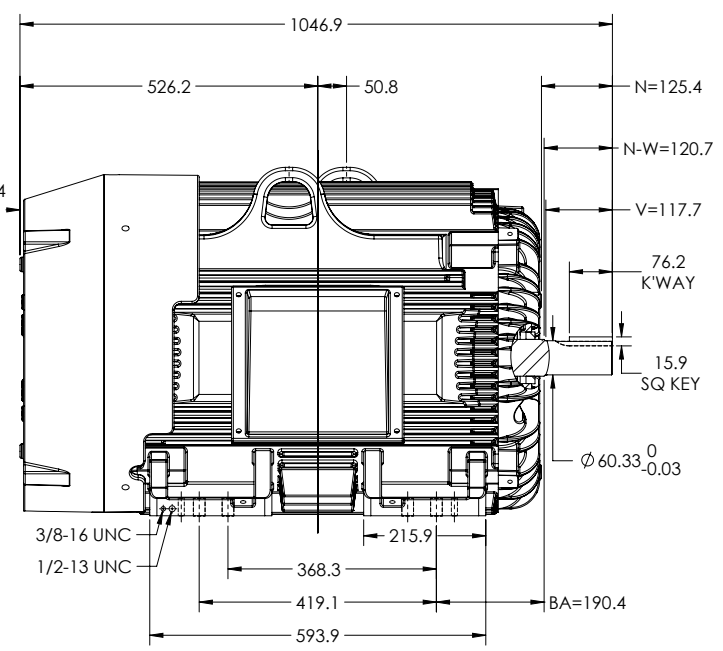

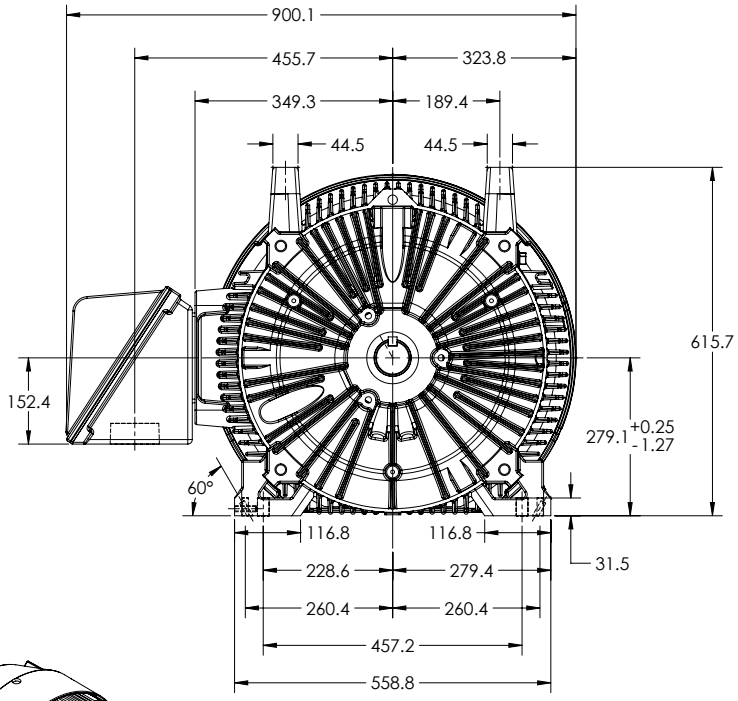

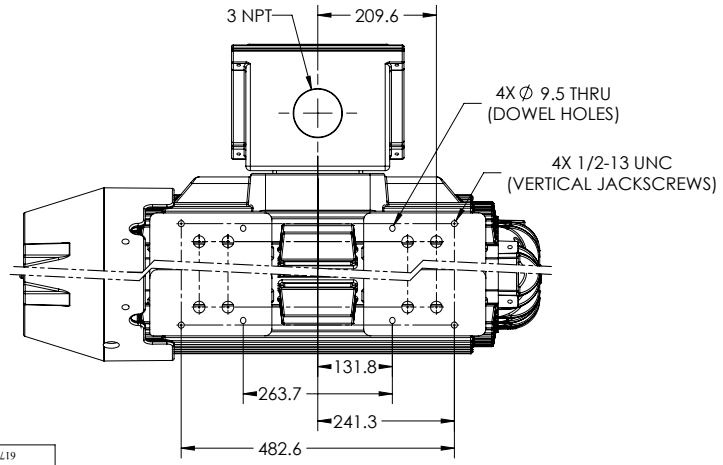

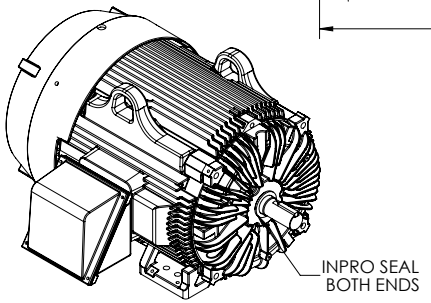

1 OBSTRUCTION MUST NOT ENCROACH ON AIR INLET.

DIMENSIONS ARE IN MILLIMETERS.
WEIGHT (KGS): 966 ±15% DEPENDING ON RATING.
IF MOUNTING CLEARANCE DETAILS ARE REQUIRED, CONSULT FACTORY.
CUSTOMER IS RESPONSIBLE FOR DETERMINING THAT MOTOR PERFORMANCE IS SUITABLE IN THE APPLICATION.
MAXIMUM PERMISSIBLE SHAFT RUNOUT WHEN MEASURED AT END OF STANDARD SHAFT EXTENSION IS .04 T.I.R.

REV. DESC: NEW DRAWING			
REV: -	VERSION: 00	REVISED: 01:22:33 12/17/2018	TDR: 000001093408
MODEL NO. 617434-659			REF: -
BY: USJEDIL	Material: _	C	G445/444TS TEFC F1 FOOT CI C/BOX/JACKSCREW/DOWEL PINS/INPROS

BALDOR

617434-659

617434-659

416820–036

A–C MOTOR
CONNECTION DIAGRAM
STANDARD 3 LEAD CONNECTED

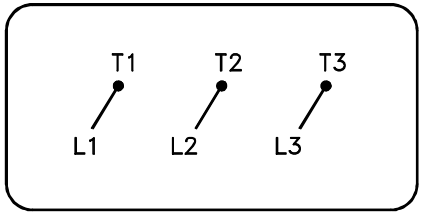

(N.P. 1575–BA)

416820–036

REV. DESC: LOADED TO BUS, C/R 335225			BALDOR
REV. LTR: –	VERSION: 00	TDR: 000000538207	
FILE: \MGA\00000\682		REVISED: 11:54:06 04/30/2010	CONN DIAG – STANDARD 3 LEAD
MTL: –		BY: RAGRA	SH 1 of 1