ABB BALDOR RELIANCE

Customer information packet

ECP84410T-4

125HP, 1785, 3PH, 60HZ, 444T, TEFC, F1
Class - CLI GP A,B,C,D
Division - Division II

Copyright © All product information within this document is subject to ABB Motors and Mechanical Inc. copyright © protection, unless otherwise noted.
11/28/2026 7:43:25 AM

Specifications

Enclosure	TEFC
Frame	444T
Frame Material	Iron
Frequency	60.00 Hz
Haz Area Class and Group	CLI GP A,B,C,D
Haz Area Division	Division II
Motor Letter Type	Three Phase
Output @ Frequency	125.000 HP @ 60 HZ
Phase	3
Synchronous Speed @ Frequency	1800 RPM @ 60 HZ
Voltage @ Frequency	460.0 V @ 60 HZ
Agency Approvals	UR
	CCSA US
Ambient Temperature	40 °C
Auxiliary Box	NO AUXILLARY BOX
Base Indicator	Rigid
Bearing Grease Type	Polyrex EM (-20F +300F)
Constant Torque Speed Range	10-60
Current @ Voltage	144.000 A @ 460.0 V
Design Code	B
Drip Cover	No Drip Cover
Duty Rating	CONT
Efficiency @ 100% Load	95.4 %
Enclosure Modification	841
Feedback Device	NO FEEDBACK
Haz Area Temp Code	T3
Heater Indicator	No Heater
High Voltage Full Load Amps	144.0 a
Insulation Class	F
Inverter Code	Inverter Ready
IP Rating	IP56
KVA Code	G

Part Detail

Revision	F
Type	AC
Mech. spec.	
Base	
Status	PRD/A
Elec. spec.	A44WG3870
Layout	617434-660
Eff. date	12-10-2025
CD Diagram	416820-036
Poles	04
Leads	3#1/0
Proprietary	False
Created date	12-12-2018

Lifting Lugs	Standard Lifting Lugs
Motor Lead Quantity/Wire Size	3 @ 1/0 AWG
Motor Standards	None
Motor Type	A44076M
Mounting Arrangement	F1
No Load Current	44.8 a
Number of Poles	4
Overall Length	44.97 IN
Power Factor	85
Pulley End Bearing Type	Ball
Pulley Face Code	Standard
Service Factor	1.15
Shaft Diameter	3.375 IN
Shaft Ground Indicator	No Shaft Grounding
Shaft Rotation	Phase Seq-Std Rot (CCWODE)
Shaft Slinger Indicator	No Slinger
Speed	1785 rpm
Speed Code	Single Speed
Starting Method	Direct on line
Thermal Device - Bearing	None
Thermal Device - Winding	None

Nameplate

NP4566												
CAT NO	ECP84410T-4	**SPEC NO.**	A44-5000-3870									
HP	125	**AMPS**	144	**VOLTS**	460	**DESIGN**	B					
FRAME SIZE	444T	**RPM**	1785	**HZ**	60	**AMB**	40	**SF**	1.15			
D.E. BRG.DATA	6318	**O.D.E. BRG.DATA**	6318	**PH**	3	**DUTY**	CONT	**INSUL.CLASS**	F			
D.E. BRG.	90BC03J30X	**TYPE**	**ENCL**	TEFC	**CODE**	G						
O.D.E. BRG.	90BC03J30X	**POWER FACTOR**	85	**NEMA-NOM-EFFICIENCY**	95.4							
3/4 LOAD EFF.	95.8	**IP**	56	**MAX CORR KVAR**	27.0	**GUARANTEED EFFICIENCY**	94.5					
TEMP CODE	T3	**TEMP =**	200									
CHP HZ	60-90	**CT HZ**	10-60	**VT HZ**	0-60							
INVERTER-TEMP-CODE	T3											
SER.NO.		**MOTOR WEIGHT**										

000613007EX					
CAT NO	ECP84410T-4	**SPEC NO.**	A44-5000-3870		
NO. ROTOR BARS	58	**GREASE TYPE**	POLYREX EM		
NO. SLOTS	72	**NL AMPS AT RATED VOLTAGE**		44.8	
5 YEAR WARRANTY		**WINDING RES @25 C**	.03840	**OHMS**	
MFG. DATE		**SER.NO**			

S/O	FRAME	HP	TYPE	PHASE/ HERTZ	RPM	VOLTS
	444	125	P	3/60	1785	460

AMPS	DUTY	AMB °C/ INSUL	S.F.	NEMA DESIGN	CODE LETTER	ENCLOSURE
144	CONT	40/F	1.15	B	G	TEFC

E/S	ROTOR	TEST S.O.	TEST DATE	STATOR RES. @25 °C OHMS (BETWEEN LINES)
498834	418143052KE	---	---	.0383

PERFORMANCE

LOAD	HP	AMPERES	RPM	% POWER FACTOR	% EFFICIENCY
NO LOAD	0	44.8	1800	4.44	0
1/4	31.3	61.7	1796	51.1	92.8
2/4	62.5	84.1	1792	73.0	95.3
3/4	93.7	112	1788	81.7	95.7
4/4	125	144	1784	85.3	95.5
5/4	156	178	1780	86.6	95.1

SPEED TORQUE

	RPM	TORQUE % FULL LOAD	TORQUE LB.-FT.	AMPERES
LOCKED ROTOR	0	133	489	892
PULL UP	270	114	420	875
BREAKDOWN	1729	290	1067	500
FULL LOAD	1784	100	368	144

AMPERES SHOWN FOR 460 VOLT CONNECTION. IF OTHER CONNECTIONS ARE AVAILABLE, THE AMPERES WILL VARY INVERSELY WITH THE RATED VOLTAGE.

TYPICAL DATA
NEMA NOMINAL EFFICIENCY = 95.4PCT.

ABB	DRAWN BY: CD CHECKED BY: CD APPROVED BY: R. MCELVEEN DATE: 1/18/11	AC MOTOR PERFORMANCE DATA	A44WG3870-R001 DATE ISSUED 05/04/21

FRAME 444	RPM 1785	S.F. 1.15	ROTOR 418143052KE
HP 125	VOLTS 460	NEMA DESIGN B	TEST S.O. TYPICAL DATA
TYPE P	AMPS 144	CODE LETTER G	TEST DATE ---
PHASE / HERTZ 3/60	DUTY CONT	ENCLOSURE TEFC	STATOR RES. @ 25°C .0383
	AMB °C / INSUL 40/F	E/S 498834	OHMS (BETWEEN LINES)

NEMA NOMINAL EFFICIENCY = 95.4PCT.

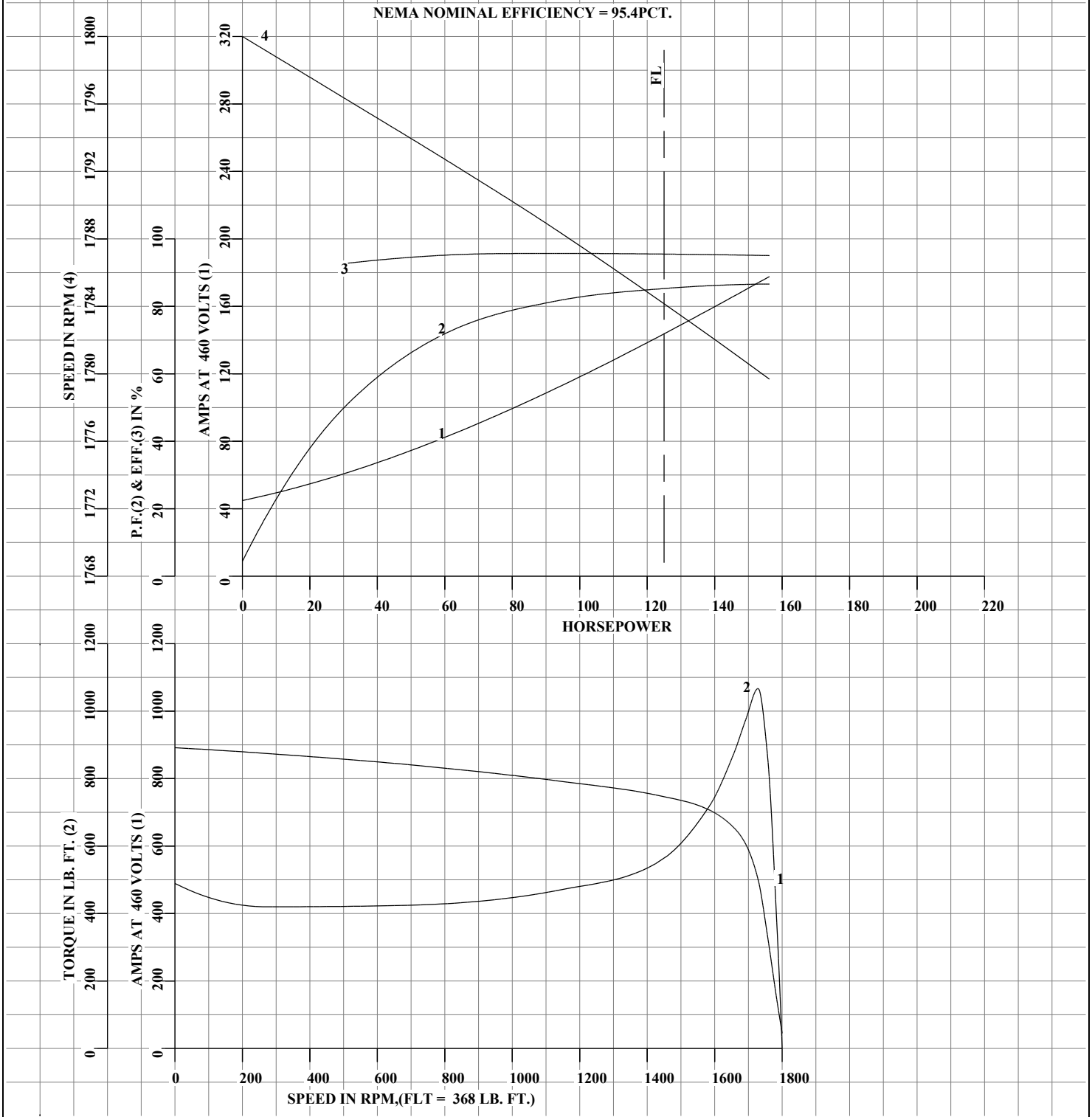

AMPERES SHOWN FOR 460 VOLT CONNECTION, IF OTHER VOLTAGE CONNECTIONS ARE AVAILABLE, THE AMPERES WILL VARY INVERSELY WITH THE RATED VOLTAGE.

ABB	DRAWN BY: CD CHECKED BY: CD APPROVED BY: R. MCELVEEN DATE: 1/18/11	AC MOTOR PERFORMANCE DATA	A44WG3870-R001 ISSUE DATE 05/04/21

FRAME 444	RPM 1785	S.F. 1.15	ROTOR 418143052KE
HP 125	VOLTS 460	NEMA DESIGN B	TEST S.O. TYPICAL DATA
TYPE P	AMPS 144	CODE LETTER G	TEST DATE ---
PHASE / HERTZ 3/60	DUTY CONT	ENCLOSURE TEFC	STATOR RES. @ 25°C .0383
	AMB °C / INSUL 40/F	E/S 498834	OHMS (BETWEEN LINES)

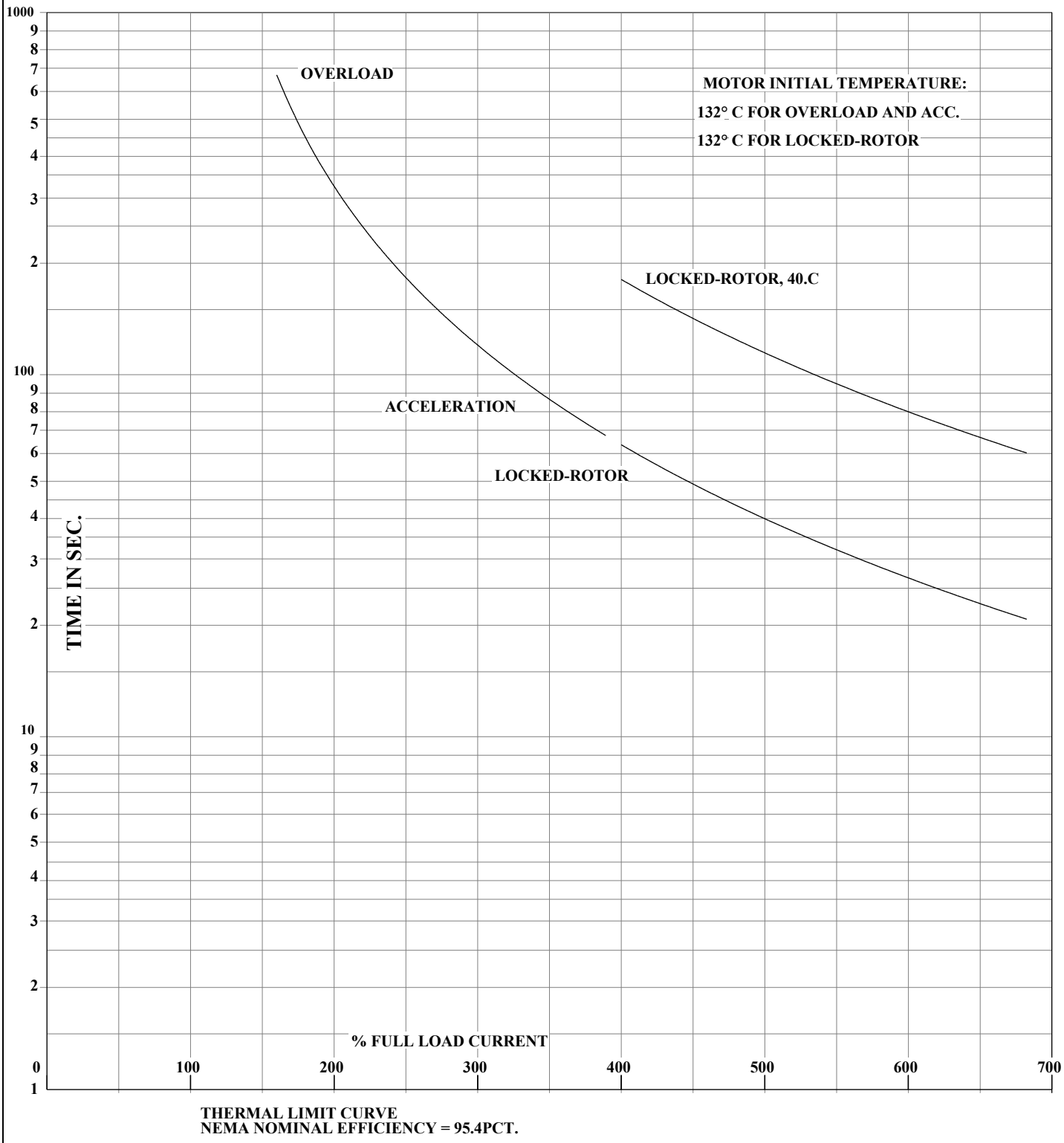

THERMAL LIMIT CURVE
NEMA NOMINAL EFFICIENCY = 95.4PCT.

AMPERES SHOWN FOR 460 VOLT CONNECTION, IF OTHER VOLTAGE CONNECTIONS ARE AVAILABLE, THE AMPERES WILL VARY INVERSELY WITH THE RATED VOLTAGE.

ABB	DRAWN BY: CD CHECKED BY: CD APPROVED BY: R. MCELVEEN DATE: 1/18/11	AC MOTOR PERFORMANCE DATA	A44WG3870-R001 ISSUE DATE 05/04/21

DUTY MASTER ALTERNATING CURRENT MOTORS

617434-660

ENCLOSURE: TOTALLY ENCLOSED | SQUIRREL-CAGE INDUCTION | COOLING: FAN COOLED

MOUNTING: FOOT, F-1 SIDE | G445T/G444T FRAME MOUNTING HOLES CENTER OF GRAVITY | 841-XL ENHANCEMENT

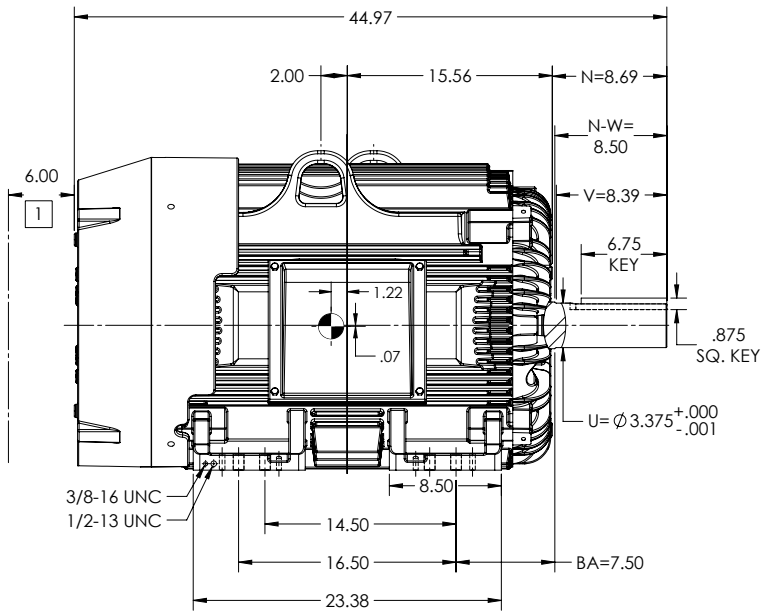

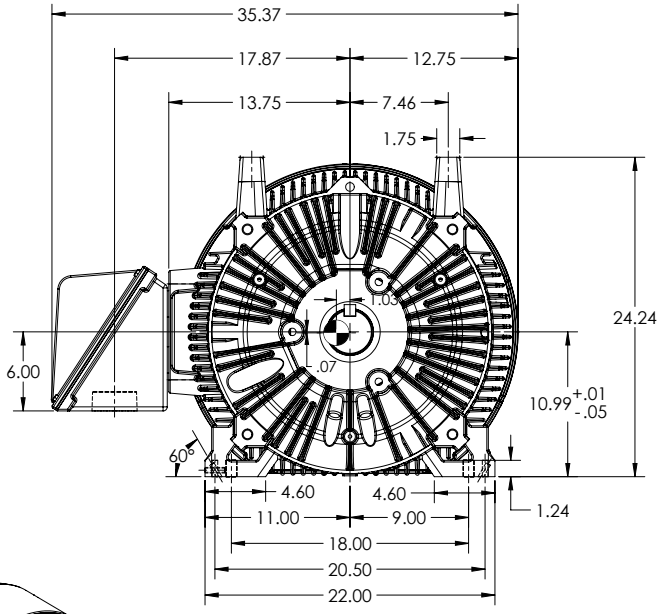

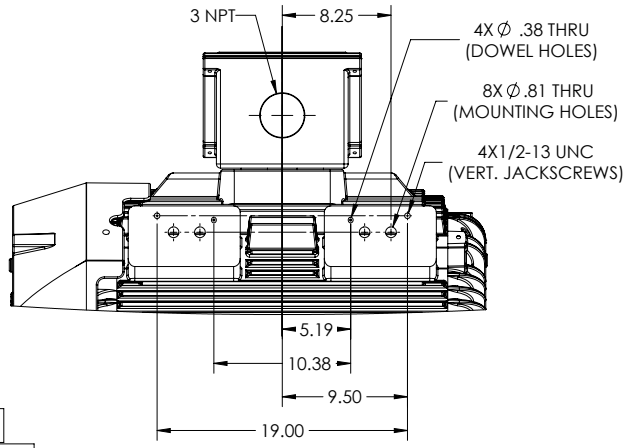

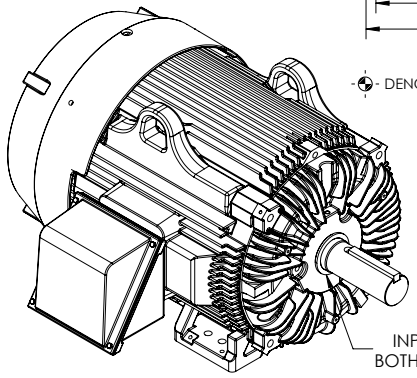

⊕ - DENOTES CENTER OF GRAVITY WHICH VARIES BY ±1.00 INCH

1 OBSTRUCTION MUST NOT ENCROACH ON AIR INLET.

DIMENSIONS ARE IN INCHES.
MOTOR WEIGHTS (LBS) = 2130 ±15% DEPENDING ON RATING.
IF MOUNTING CLEARANCE DETAILS ARE REQUIRED, CONSULT FACTORY.
MAX PERMISSIBLE SHAFT RUNOUT WHEN MEASURED AT END OF STANDARD SHAFT EXTENSION IS .0015 T.I.R.(BALL) OR .002 T.I.R.(ROLLER)
CUSTOMER IS RESPONSIBLE FOR DETERMINING THAT MOTOR PERFORMANCE IS SUITABLE IN THE APPLICATION.

SHEET NUMBER 1 OF 2

617434-660

REV. DESC: ADD CENTER GRAVITY			
REV: C	VERSION: 03	REVISED: 08:56:38 03/10/2020	TDR: 000001134943
MODEL NO. 617434-660			REF:
BY: RAGGDM	Material:	C	BALDOR

G445/444T TEFC F1 FTD/CI BX/JACKSCREWS/DOWEL PINS/INPROS/CG

617434-660

DUTY MASTER ALTERNATING CURRENT MOTORS

617434-660

ENCLOSURE: TOTALLY ENCLOSED

SQUIRREL-CAGE INDUCTION

COOLING: FAN COOLED

MOUNTING: FOOT, F-1 SIDE

G445T/G444T FRAME MOUNTING HOLES
CENTER OF GRAVITY

841-XL ENHANCEMENT

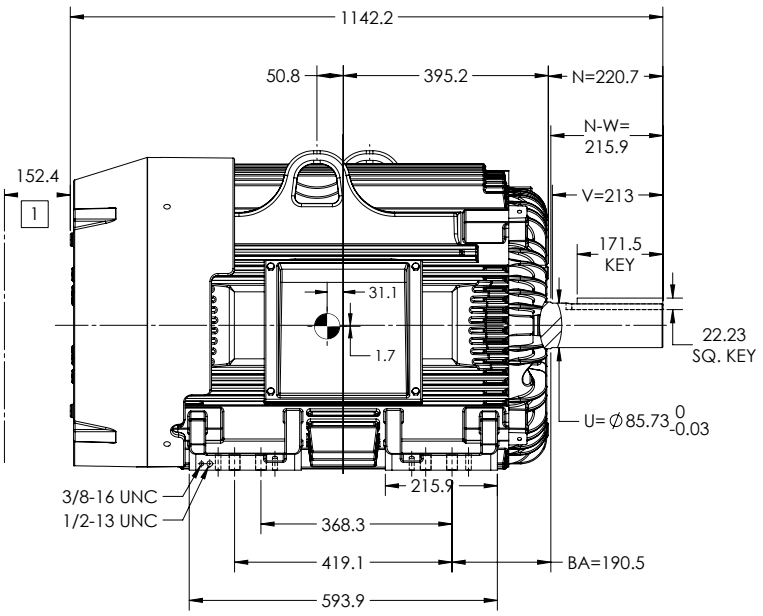

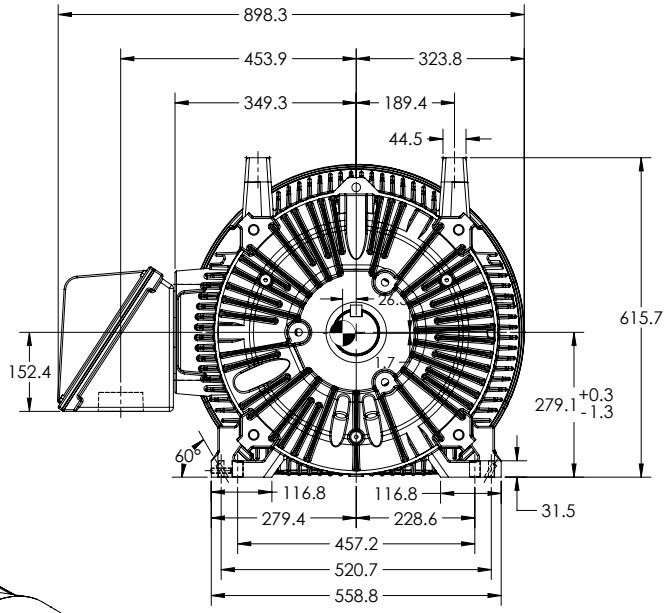

⊕ - DENOTES CENTER OF GRAVITY WHICH VARIES BY ±1.00 INCH

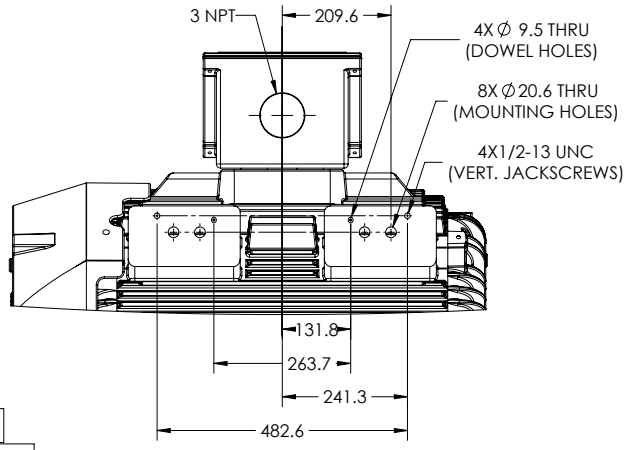

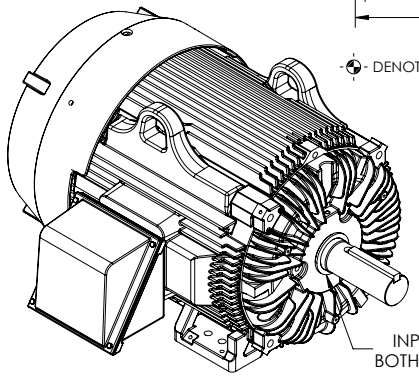

1 OBSTRUCTION MUST NOT ENCROACH ON AIR INLET.

DIMENSIONS ARE IN MILLIMETERS.
MOTOR WEIGHTS (KGS) = 970 ±15% DEPENDING ON RATING.
IF MOUNTING CLEARANCE DETAILS ARE REQUIRED, CONSULT FACTORY.
MAX PERMISSIBLE SHAFT RUNOUT WHEN MEASURED AT END OF STANDARD SHAFT EXTENSION IS .04 T.I.R.(BALL) OR .05 T.I.R.(ROLLER)
CUSTOMER IS RESPONSIBLE FOR DETERMINING THAT MOTOR PERFORMANCE IS SUITABLE IN THE APPLICATION.

SHEET NUMBER 2 OF 2

617434-660

REV. DESC: ADD CENTER GRAVITY			
REV: C	VERSION: 03	REVISED: 08:56:38 03/10/2020	TDR: 000001134943
MODEL NO. 617434-660			REF:
BY: RAGGDM	Material:		C

BALDOR

G445/444T TEFC F1 FTD/CI BX/JACKSCREWS/DOWEL PINS/INPROS/CG

617434-660

416820–036

A–C MOTOR
CONNECTION DIAGRAM
STANDARD 3 LEAD CONNECTED

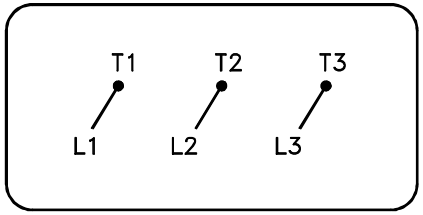

(N.P. 1575–BA)

416820–036

REV. DESC: LOADED TO BUS, C/R 335225			BALDOR
REV. LTR: –	VERSION: 00	TDR: 000000538207	
FILE: \MGA\00000\682		REVISED: 11:54:06 04/30/2010	CONN DIAG – STANDARD 3 LEAD
MTL: –		BY: RAGRA	SH 1 of 1