ABB BALDOR RELIANCE

Customer information packet

ECP84313T-4

75HP, 3555RPM, 3PH, 60HZ, 365TS, A36068M, TEFC
Class - CLI GP A,B,C,D
Division - Division II

Copyright © All product information within this document is subject to ABB Motors and Mechanical Inc. copyright © protection, unless otherwise noted.
9/14/2026 7:30:20 PM

Specifications

Enclosure	TEFC
Frame	365TS
Frame Material	Iron
Frequency	60.00 Hz
Haz Area Class and Group	CLI GP A,B,C,D
Haz Area Division	Division II
Motor Letter Type	Three Phase
Output @ Frequency	75.000 HP @ 60 HZ
Phase	3
Synchronous Speed @ Frequency	3600 RPM @ 60 HZ
Voltage @ Frequency	460.0 V @ 60 HZ
Agency Approvals	CCSAUSEEV
	NEMA PREMIUM
	NEMA_PREMIUM
	UR
	CCSA US
Ambient Temperature	40 °C
Auxiliary Box	NO AUXILLARY BOX
Base Indicator	Rigid
Bearing Grease Type	Polyrex EM (-20F +300F)
Constant Torque Speed Range	15-60
Current @ Voltage	80.700 A @ 460.0 V
Design Code	B
Drip Cover	No Drip Cover
Duty Rating	CONT
Efficiency @ 100% Load	94.5 %
Enclosure Modification	841
Feedback Device	NO FEEDBACK
Haz Area Temp Code	T3
Heater Indicator	No Heater
High Voltage Full Load Amps	80.7 a
Insulation Class	F

Part Detail

Revision	P
Type	AC
Mech. spec.	
Base	
Status	PRD/A
Elec. spec.	A36WG0179
Layout	617428-510
Eff. date	08-26-2024
CD Diagram	416820-036
Poles	02
Leads	3#2
Proprietary	False
Created date	11-27-2018

Inverter Code	Inverter Ready
IP Rating	IP56
KVA Code	F
Lifting Lugs	Standard Lifting Lugs
Max Speed	4500 rpm
Motor Lead Quantity/Wire Size	3 @ 2 AWG
Motor Standards	NEMA
Motor Type	A36068M
Mounting Arrangement	F1
No Load Current	15.6 a
Number of Poles	2
Overall Length	31.35 IN
Power Factor	92
Pulley End Bearing Type	Ball
Pulley Face Code	Standard
Service Factor	1.15
Shaft Diameter	1.875 IN
Shaft Ground Indicator	No Shaft Grounding
Shaft Rotation	Reversible: Connected Standard
Shaft Slinger Indicator	No Slinger
Speed	3555 rpm
Speed Code	Single Speed
Starting Method	Direct on line
Thermal Device - Bearing	None
Thermal Device - Winding	None

Nameplate

NP4388															
CAT #	ECP84313T-4					**FR**	365TS		IP56						
SPEC	A36-6000-0179					**ENCL**	TEFC		**DES**	B					
HZ	60	**PH**	3	**CL**	F	**HP**	75	**SF**	1.15	**PF**	92	**%**	**CODE**	F	
VOLTS	460					**AMPS**	80.7								
RPM	3555		**MAX RPM**	4500		**SER**									
NEMA NOM. EFF	94.5	**%**	**RATING**	40C AMB-CONT											
GUAR MIN. EFF	93.6	**%**	**BRG DE**	6313		**BRG ODE**	6313								
CL I DIV 2 GRPS A,B,C,D			**CL I ZONE 2 GRPS**			**IIA,IIB,IIC**		**TEMP T**		3-200	**C**				
CT HZ	15-60		**VT HZ**	0-60											
CHP HZ	60-75		**INV TEMP CL**	200	**C**										
						MTR WT	970	**LBS**							

NP4333					
CAT #	ECP84313T-4		**ROTOR BARS**	38	
SPEC	A36-6000-0179		**STATOR SLOTS**	48	
SER			**MAX CORR KVAR**	5	
GREASE	POLYREX EM				
ABMA DE BRG	65BC03J30X	**ODE**	65BC03J30X		
SPACE HEATER LEADS H1-H2:	**TIE LIKE NUMBERS**		**TOGETHER**		
MAX. SPACE HEATER TEMP.	**C**	**V**	**A**		**W**

S/O	FRAME	HP	TYPE	PHASE/ HERTZ	RPM	VOLTS
	365TS	75	P	3/60	3555	460

AMPS	DUTY	AMB °C/ INSUL	S.F.	NEMA DESIGN	CODE LETTER	ENCLOSURE
80.7	CONT	40/F	1.15	B	F	TEFC

E/S	ROTOR	TEST S.O.	TEST DATE	STATOR RES. @25 °C OHMS (BETWEEN LINES)
892018	418141005TE	---	---	.0744

PERFORMANCE

LOAD	HP	AMPERES	RPM	% POWER FACTOR	% EFFICIENCY
NO LOAD	0	15.9	3600	8.69	0
1/4	18.8	24.5	3589	77.9	92.0
2/4	37.5	40.2	3578	92.2	94.8
3/4	56.2	58.6	3567	94.3	95.3
4/4	75.0	78.9	3555	93.6	95.1
5/4	93.8	101	3542	92.2	94.6

SPEED TORQUE

	RPM	TORQUE % FULL LOAD	TORQUE LB.-FT.	AMPERES
LOCKED ROTOR	0	218	242	494
PULL UP	1565	190	210	440
BREAKDOWN	3395	230	255	259
FULL LOAD	3555	100	111	78.9

AMPERES SHOWN FOR 460 VOLT CONNECTION. IF OTHER CONNECTIONS ARE AVAILABLE, THE AMPERES WILL VARY INVERSELY WITH THE RATED VOLTAGE.

TYPICAL DATA
XE MOTOR-NEMA NOM. EFF. 95.0 %

ABB	DRAWN BY: G. R. WEBB CHECKED BY: C. E. JAMISON APPROVED BY: C. E. JAMISON DATE: 12/09/15	AC MOTOR PERFORMANCE DATA	A36WG0179-R007 DATE ISSUED 12/18/15

ABB BALDOR RELIANCE

CUSTOMER INFORMATION PACKET

FRAME 365TS	RPM 3555	S.F. 1.15	ROTOR 418141005TE
HP 75	VOLTS 460	NEMA DESIGN B	TEST S.O. TYPICAL DATA
TYPE P	AMPS 80.7	CODE LETTER F	TEST DATE ---
PHASE / HERTZ 3/60	DUTY CONT	ENCLOSURE TEFC	STATOR RES. @ 25°C .0744
	AMB °C / INSUL 40/F	E/S 892018	OHMS (BETWEEN LINES)

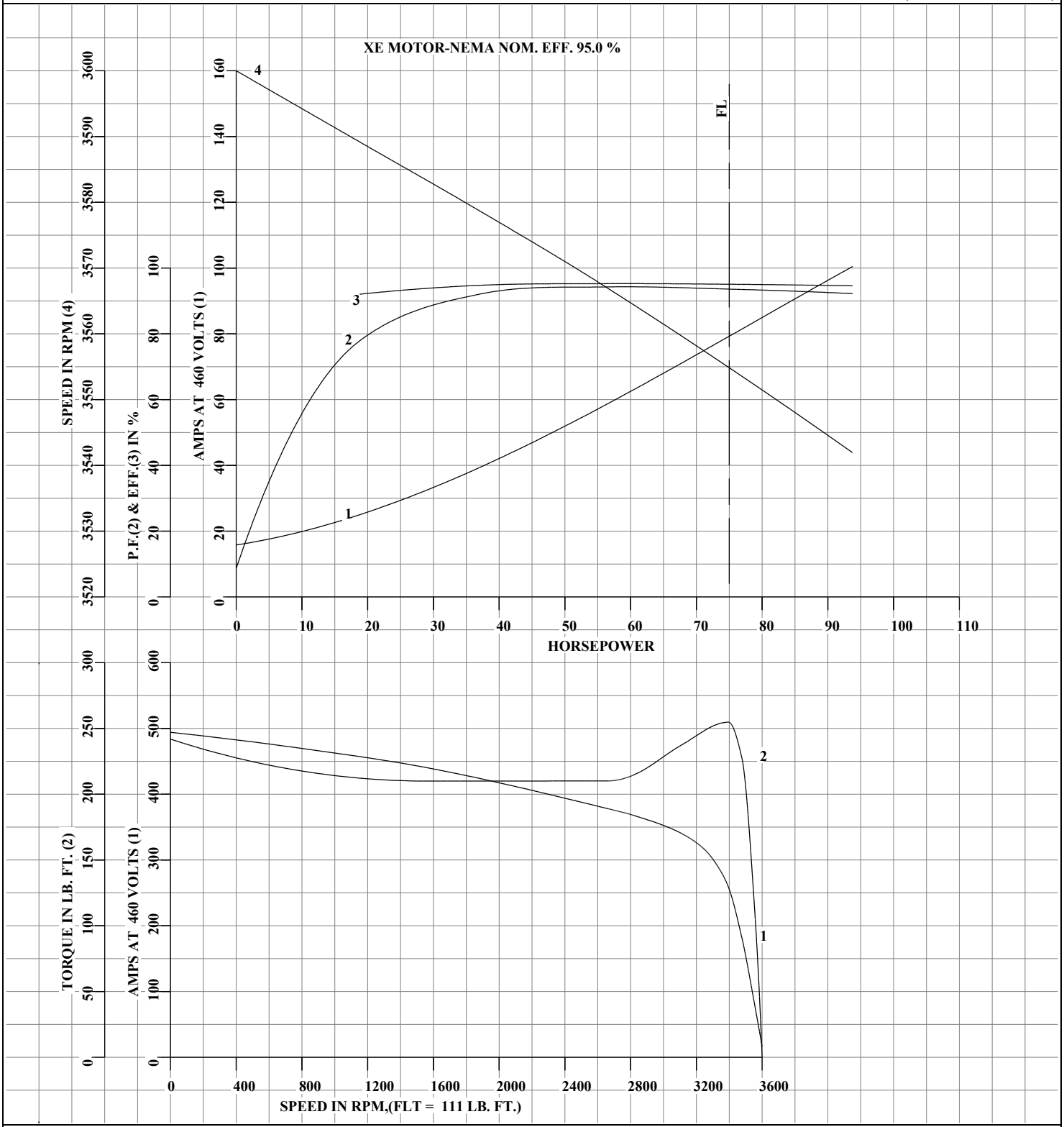

AMPERES SHOWN FOR 460 VOLT CONNECTION, IF OTHER VOLTAGE CONNECTIONS ARE AVAILABLE, THE AMPERES WILL VARY INVERSELY WITH THE RATED VOLTAGE.

ABB	DRAWN BY: G. R. WEBB CHECKED BY: C. E. JAMISON APPROVED BY: C. E. JAMISON DATE: 12/09/15	AC MOTOR PERFORMANCE DATA	A36WG0179-R007 ISSUE DATE 12/18/15

FRAME 365TS	RPM 3555	S.F. 1.15	ROTOR 418141005TE
HP 75	VOLTS 460	NEMA DESIGN B	TEST S.O. TYPICAL DATA
TYPE P	AMPS 80.7	CODE LETTER F	TEST DATE ---
PHASE / HERTZ 3/60	DUTY CONT	ENCLOSURE TEFC	STATOR RES. @ 25°C .0744
	AMB °C / INSUL 40/F	E/S 892018	OHMS (BETWEEN LINES)

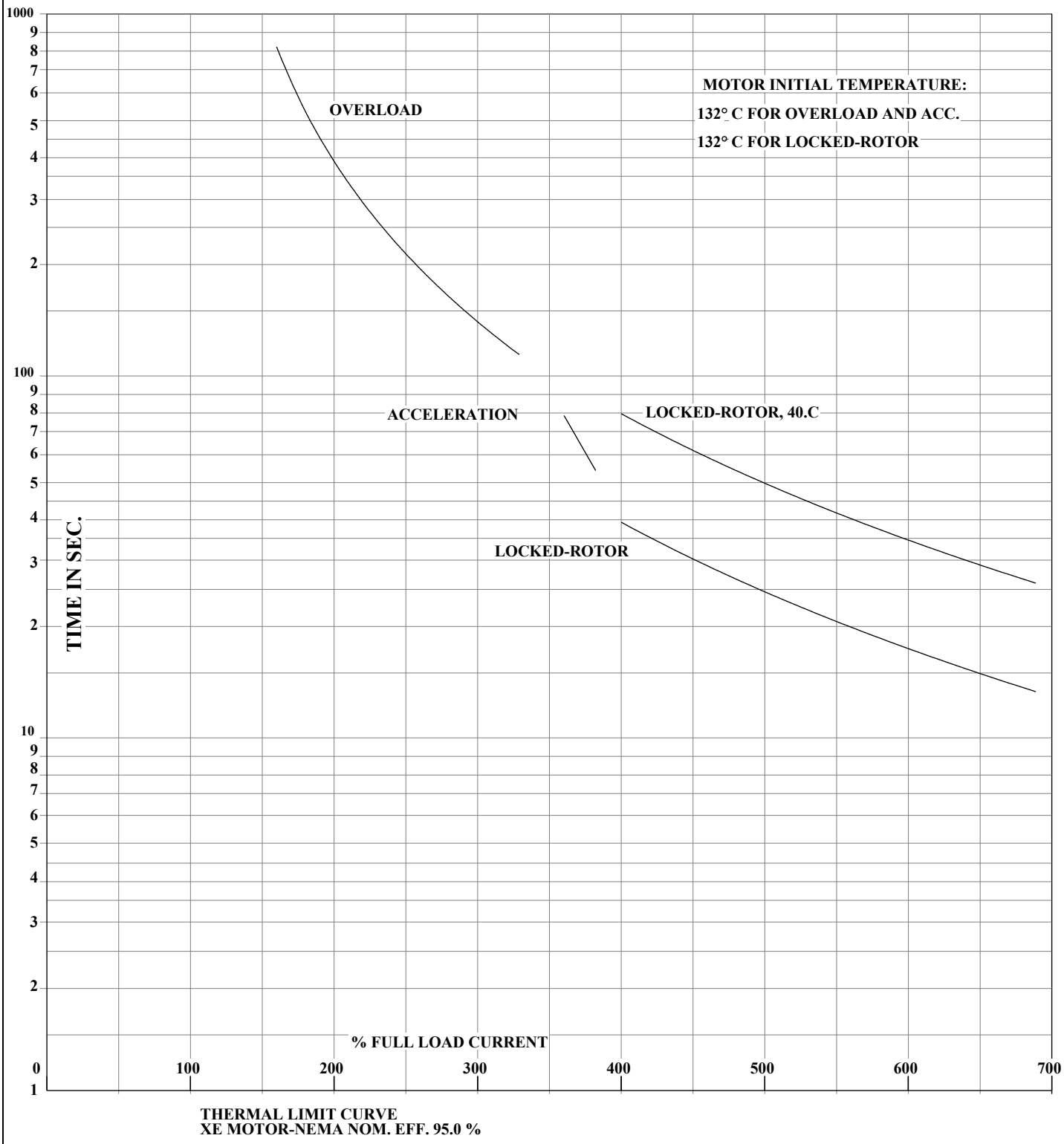

THERMAL LIMIT CURVE
XE MOTOR-NEMA NOM. EFF. 95.0 %

AMPERES SHOWN FOR 460 VOLT CONNECTION, IF OTHER VOLTAGE CONNECTIONS ARE AVAILABLE, THE AMPERES WILL VARY INVERSELY WITH THE RATED VOLTAGE.

ABB	DRAWN BY: G. R. WEBB CHECKED BY: C. E. JAMISON APPROVED BY: C. E. JAMISON DATE: 12/09/15	AC MOTOR PERFORMANCE DATA	A36WG0179-R007 ISSUE DATE 12/18/15

DUTY MASTER ALTERNATING CURRENT MOTORS

617428-510

ENCLOSURE: TOTALLY ENCLOSED | SQUIRREL-CAGE INDUCTION | COOLING: FAN COOLED

MOUNTING: FOOT, F-1 SIDE | E365TS/E364TS FRAME MOUNTING HOLES | ENCLOSURE ENHANCEMENT: 841-XL

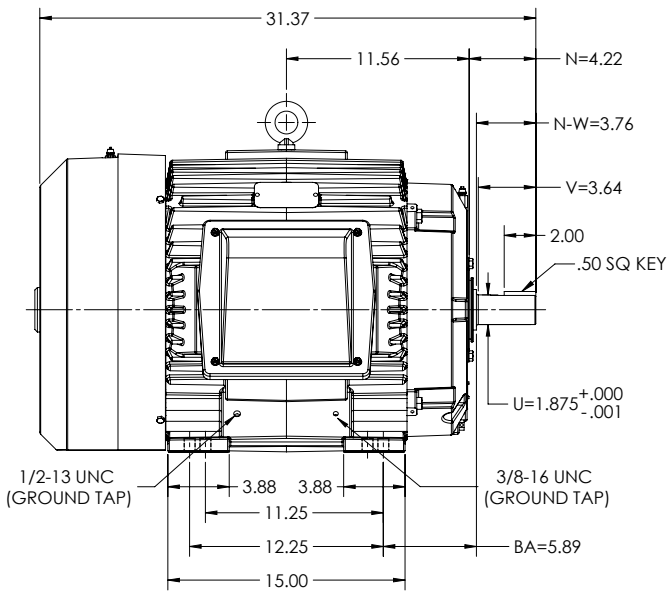

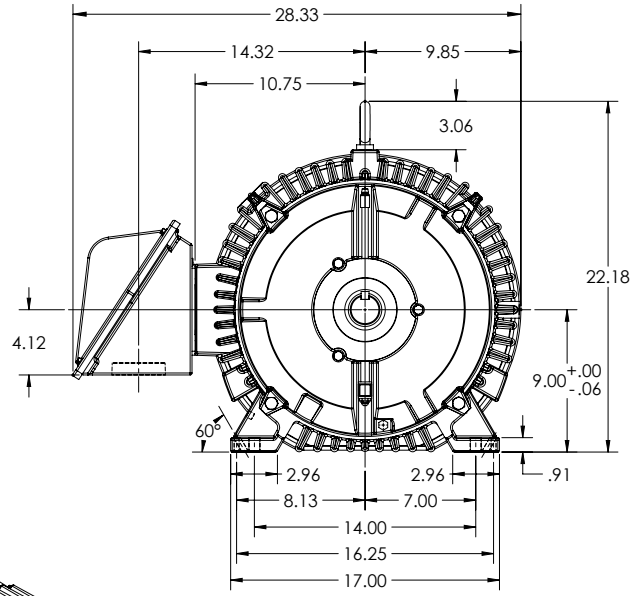

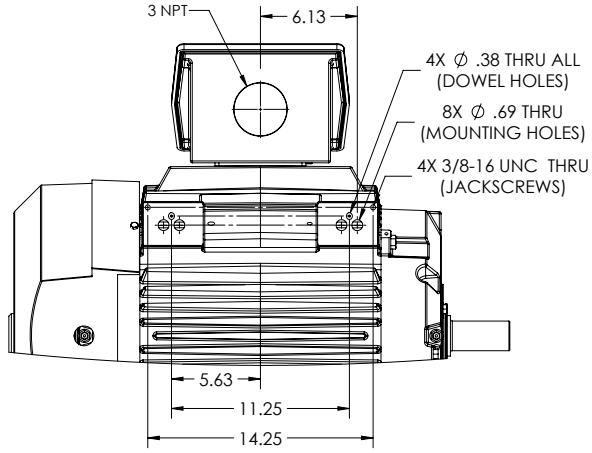

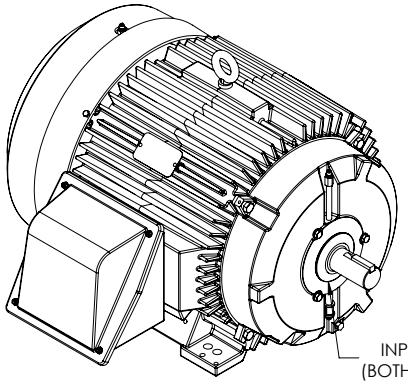

DIMENSIONS ARE IN INCHES.
CUSTOMER IS RESPONSIBLE FOR DETERMINING THAT MOTOR PERFORMANCE IS SUITABLE IN THE APPLICATION.

IF MOUNTING CLEARANCE DETAILS ARE REQUIRED, CONSULT FACTORY.
MAX PERMISSIBLE SHAFT RUNOUT WHEN MEASURED AT END OF STANDARD SHAFT EXTENSION IS .0015" T.I.R.

REV. DESC: UPDATE MODEL TO ADD EXTERNAL HARDWARE PER PROD MGM			
REV: B	VERSION: 02	REVISED: 08:14:18 10/04/2022	TDR: 000001196512
MODEL NO. 617428-510			
BY: ENFRAJ0			C

BALDOR

E365/364TS TEFC FOOT F1/CI BOX/INPROS/DOWELS & JACKSCREWS

617428-510

416820–036

A–C MOTOR
CONNECTION DIAGRAM
STANDARD 3 LEAD CONNECTED

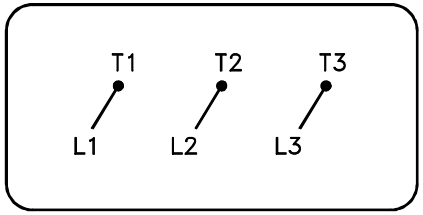

(N.P. 1575–BA)

416820–036

REV. DESC: LOADED TO BUS, C/R 335225			BALDOR
REV. LTR: –	VERSION: 00	TDR: 000000538207	
FILE: \MGA\00000\682		REVISED: 11:54:06 04/30/2010	CONN DIAG – STANDARD 3 LEAD
MTL: –		BY: RAGRA	SH 1 of 1