ABB BALDOR RELIANCE

Customer information packet

ECP84109T-5

40HP, 3530RPM, 3PH, 60HZ, 324TS, TEFC, F1
Class - CLI GP A,B,C,D
Division - Division II

Copyright © All product information within this document is subject to ABB Motors and Mechanical Inc. copyright © protection, unless otherwise noted.
11/24/2026 12:13:16 AM

Specifications

Enclosure	TEFC
Frame	324TS
Frame Material	Iron
Frequency	60.00 Hz
Haz Area Class and Group	CLI GP A,B,C,D
Haz Area Division	Division II
Motor Letter Type	Three Phase
Output @ Frequency	40.000 HP @ 60 HZ
Phase	3
Synchronous Speed @ Frequency	3600 RPM @ 60 HZ
Voltage @ Frequency	575.0 V @ 60 HZ
Agency Approvals	CCSA US
	CSA EEV
	NEMA PREMIUM
	NEMA_PREMIUM
	UR
Ambient Temperature	40 °C
Auxiliary Box	NO AUXILLARY BOX
Auxiliary Box Lead Termination	None
Base Indicator	Rigid
Bearing Grease Type	Polyrex EM (-20F +300F)
Blower	None
Constant Torque Speed Range	6
Current @ Voltage	35.000 A @ 575.0 V
Design Code	B
Drip Cover	No Drip Cover
Duty Rating	CONT
Efficiency @ 100% Load	92.4 %
Electrically Isolated Bearing	Not Electrically Isolated
Enclosure Modification	841
Feedback Device	NO FEEDBACK
Haz Area Temp Code	T3

Part Detail

Revision	H
Type	AC
Mech. spec.	
Base	
Status	PRD/A
Elec. spec.	12WGY682
Layout	12LYF808
Eff. date	11-03-2025
CD Diagram	CD0006
Poles	02
Leads	3#10
Proprietary	False
Created date	12-12-2018

Heater Indicator	No Heater
High Voltage Full Load Amps	35.0 a
Insulation Class	F
Inverter Code	Inverter Duty
IP Rating	IP56
KVA Code	F
Lifting Lugs	Standard Lifting Lugs
Locked Bearing Indicator	Locked Bearing
Max Speed	5400 rpm
Motor Lead Termination	Ring Terminals
Motor Standards	NEMA
Motor Type	1256M
Mounting Arrangement	F1
Number of Poles	2
Overall Length	29.24 IN
Power Factor	91
Product Family	Chem Process S/P 32-8 IEEE 841
Pulley Face Code	Standard
Rodent Screen	None
Service Factor	1.15
Shaft Diameter	1.875 IN
Shaft Ground Indicator	No Shaft Grounding
Shaft Rotation	Reversible
Speed	3530 rpm
Speed Code	Single Speed
Starting Method	Direct on line
Thermal Device - Bearing	None
Thermal Device - Winding	None
Vibration Sensor Indicator	No Vibration Sensor
Winding Thermal 1	None
Winding Thermal 2	None

Nameplate

NP4332													
CAT.NO.	ECP84109T-5			**P/N**				**ENCLOSURE**	TEFC				
SPEC.	12-0000-0370		**CC**	010A	**FRAME**	324TS		**S/N**					
HP	40			**CLASS**	F	**HZ**	60	**ODE BRG**	6312	**DE BRG**	6312		
RPM	3530	**RPM MAX**	5400	**PH**	3	**DES**	B	**D.E. BRG.**	60BC03X30X				
VOLT	575			**KVA-CODE**	F			**O.D.E. BRG.**	60BC03X30X				
AMP	35			**MOTOR WEIGHT**	624	**GREASE**	POLYREX EM						
RATING	40C AMB-CONT			**MAX. KVAR**	4	**BLANK**							
NEMA-NOM-EFF	92.4	**# OF ROTOR BARS**	28	**SER.F.**	1.15	**IP**	56						
G.MIN.EFF	91	**# OF STATOR SLOTS**	36	**PF**	91	**INV.TYPE**	PWM						
TEMP CODE	T3	**INVERTER-TEMP-CODE**	200										
TEMP =	200	**C HP FR**	60	**C HP TO**	90								
CT HZ FROM	6	**CT HZ TO**	60										
HTR-VOLTS		**HTR-AMPS**		**HTR-WATTS**		**MAX. SPACE HEATER TEMP.**		**VT HZ FROM**	3	**VT HZ TO**	60		

AC Induction Motor Performance Data
Record # 47229
Typical performance - not guaranteed values

Winding: 12WGY682-R001	**Type:** 1256M	**Enclosure:** TEFC

Nameplate Data			
Rated Output (HP)			40
Volts			575
Full Load Amps			35
R.P.M.			3530
Hz	60	**Phase**	3
NEMA Design Code	B	**KVA Code**	F
Service Factor (S.F.)			1.15
NEMA Nom. Eff.	92.4	**Power Factor**	91
Rating - Duty			40C AMB-CONT
S.F. Amps			41

575 V, 60 Hz: Single Voltage Motor	
Full Load Torque	59.4 LB-FT
Start Configuration	direct on line
Breakdown Torque	173 LB-FT
Pull-up Torque	60.3 LB-FT
Locked-rotor Torque	78.3 LB-FT
Starting Current	224 A
No-load Current	7.75 A
Line-line Res. @ 25ºC	0.229 Ω
Temp. Rise @ Rated Load	64°C
Temp. Rise @ S.F. Load	79°C
Locked-rotor Power Factor	20.5
Rotor inertia	4.38 lb-ft²

Load Characteristics 575 V, 60 Hz, 40 HP

% of Rated Load	**25**	**50**	**75**	**100**	**125**	**150**	**S.F.**
Power Factor	72	86	90	91	91	90	91
Efficiency	89.7	92.7	93.1	92.8	92.1	91.1	92.4
Speed	3583	3568	3553	3537	3518	3497	3526
Line amperes	11.9	18.9	26.7	35.3	44.8	54.7	41

ABB Motors and Mechanical Inc.

WINDING # 12WGY682

40 HP 3 PH 60 HZ 3530 RPM 575 V 1256M

TORQUES(LB-FT): PO=173 PU=60.3 LR=78.3 LRA=224

Typical performance - not guaranteed values.

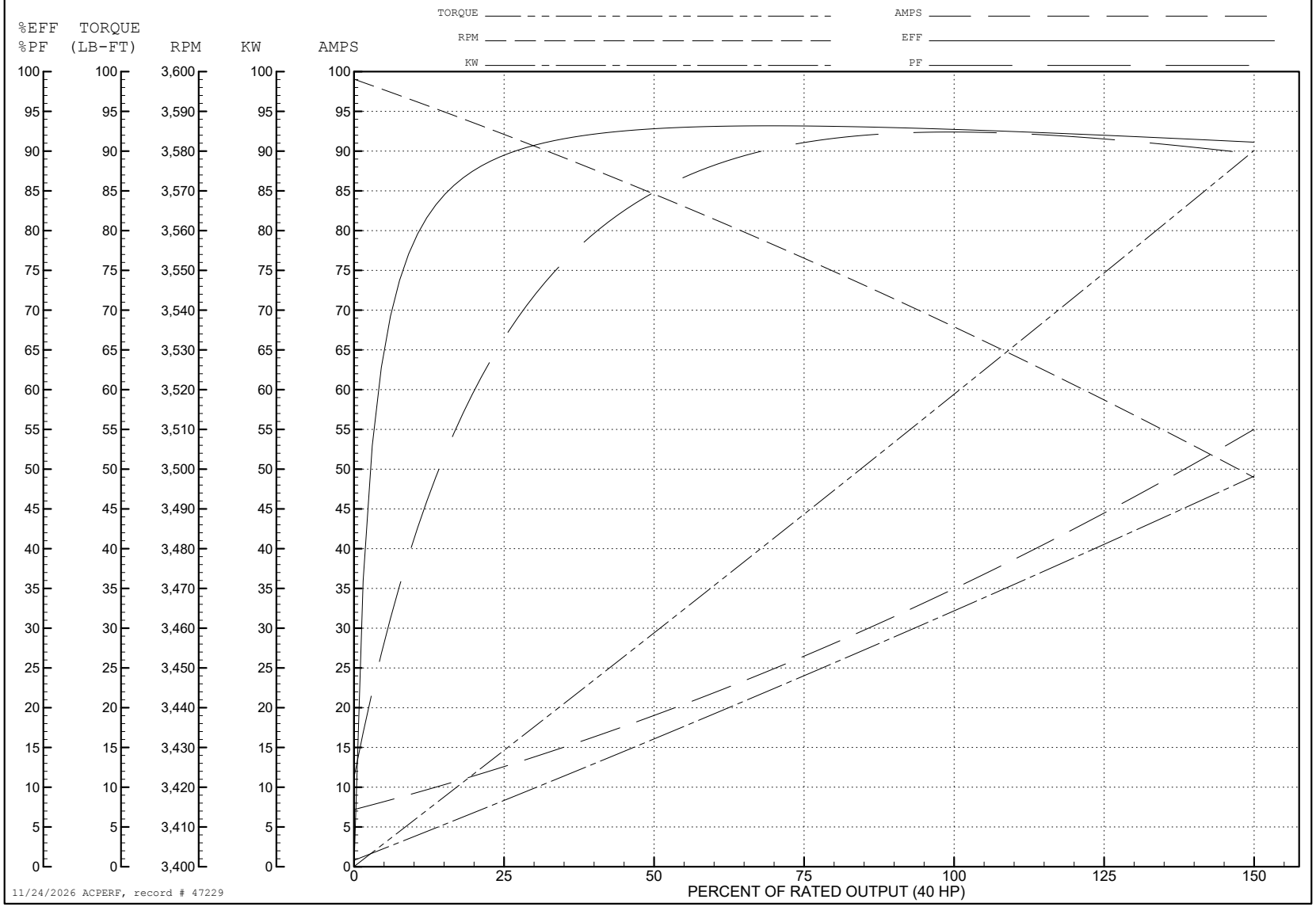

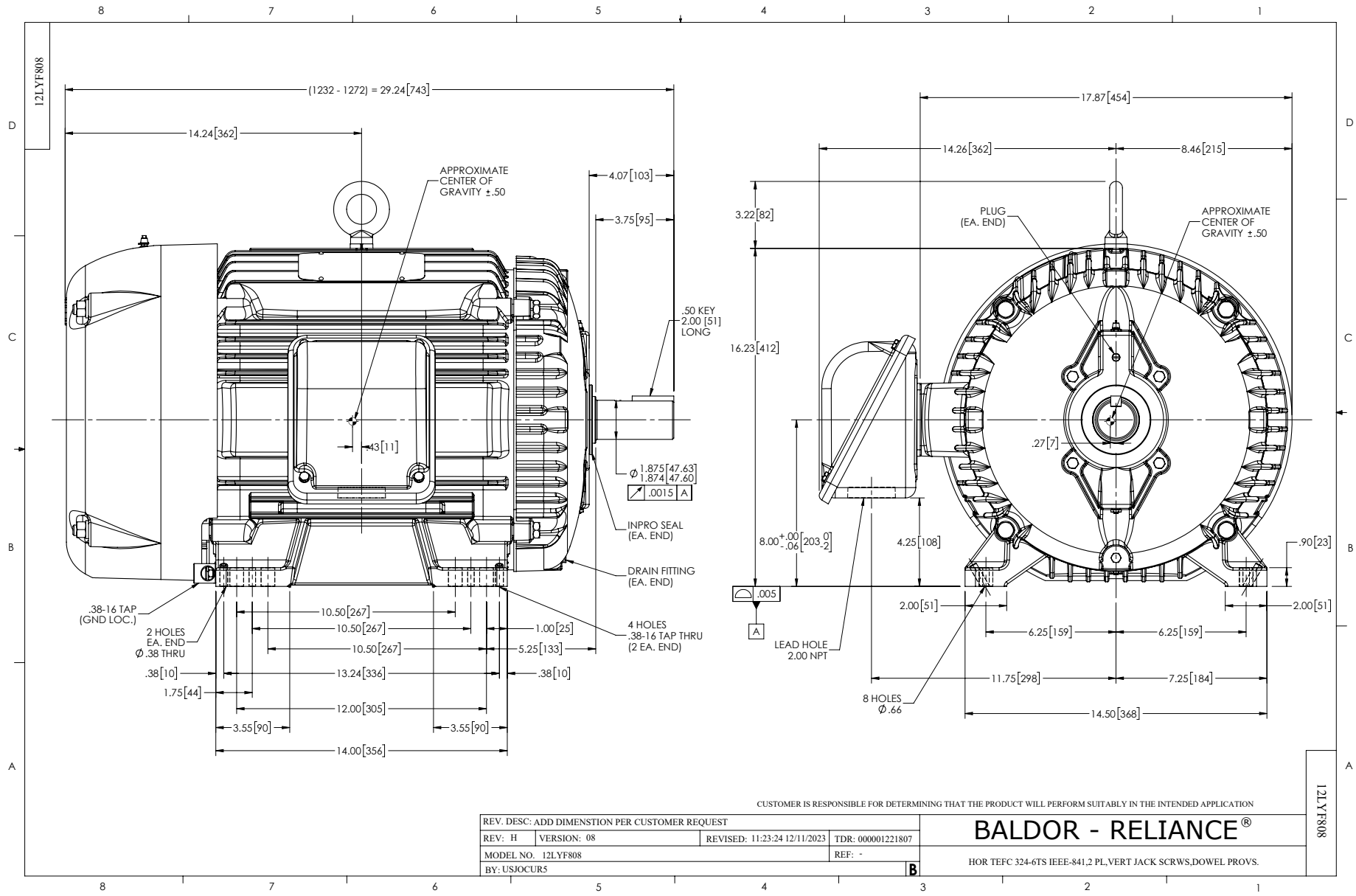
12LYF808
(1232 - 1272) = 29.24[743]
14.24[362]
APPROXIMATE CENTER OF GRAVITY ±.50
4.07[103]
3.75[95]
.50 KEY 2.00 [51] LONG
.43[11]
Ø 1.875[47.63] 1.874[47.60]
.0015 A
INPRO SEAL (EA. END)
DRAIN FITTING (EA. END)
4 HOLES .38-16 TAP THRU (2 EA. END)
.38-16 TAP (GND LOC.)
2 HOLES EA. END Ø.38 THRU
10.50[267]
10.50[267]
10.50[267]
1.00[25]
5.25[133]
.38[10]
13.24[336]
.38[10]
1.75[44]
12.00[305]
3.55[90]
3.55[90]
14.00[356]
17.87[454]
14.26[362]
8.46[215]
3.22[82]
PLUG (EA. END)
APPROXIMATE CENTER OF GRAVITY ±.50
16.23[412]
.27[7]
8.00 +.00 -.06 [203.2 0 -2]
4.25[108]
.90[23]
.005
A
LEAD HOLE 2.00 NPT
2.00[51]
2.00[51]
6.25[159]
6.25[159]
11.75[298]
7.25[184]
8 HOLES Ø.66
14.50[368]
CUSTOMER IS RESPONSIBLE FOR DETERMINING THAT THE PRODUCT WILL PERFORM SUITABLY IN THE INTENDED APPLICATION
REV. DESC: ADD DIMENSTION PER CUSTOMER REQUEST
REV: H
VERSION: 08
REVISED: 11:23:24 12/11/2023
TDR: 000001221807
MODEL NO. 12LYF808
REF: -
BY: USJOCUR5
B
BALDOR - RELIANCE®
HOR TEFC 324-6TS IEEE-841,2 PL,VERT JACK SCRWS,DOWEL PROVS.
12LYF808

CD0006

TYPICAL WYE–CONNECTED MOTOR

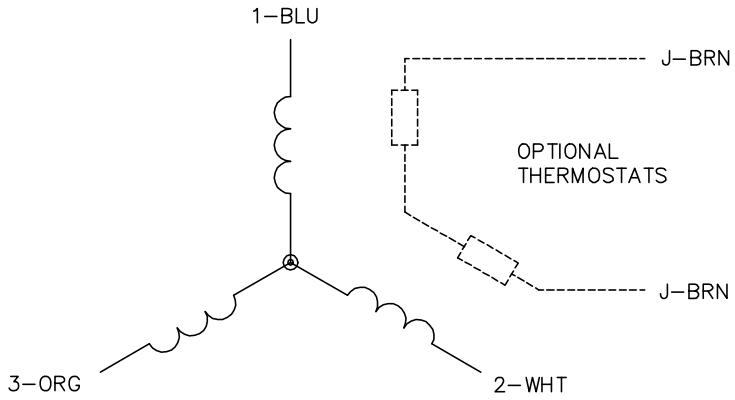

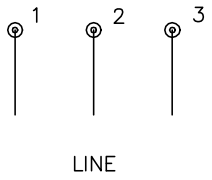

TYPICAL DELTA–CONNECTED MOTOR

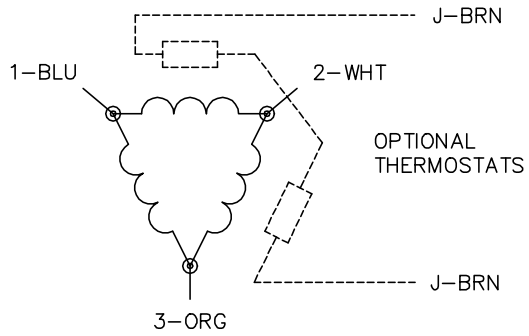

NOTES:

1. THREE LEAD MOTOR MAY BE EITHER WYE CONNECTED OR DELTA CONNECTED.
2. INTERCHANGE ANY TWO LINE LEADS TO REVERSE ROTATION.
3. OPTIONAL THERMOSTATS ARE PROVIDED WHEN SPECIFIED.
4. ACTUAL NUMBER OF INTERNAL PARALLEL CIRCUITS MAY VARY.
5. LEAD COLORS ARE OPTIONAL. LEADS MUST BE NUMBERED AS SHOWN.

CD0006

REV. DESC: ADD CLASS CONN00000007		
REV. LTR: E	VERSION: 01	TDR: 000001099922
FILE: \AAA\00005\141	REVISED: 10:24:49 02/19/2019	BY: ENBRIR0
MTL: –		

BALDOR - RELIANCE®

3PH, SV, 3 LEADS, WYE OR DELTA CONNECTED

SH 1 of 1