ABB BALDOR RELIANCE

Customer information packet

ECP4403T-4

60HP, 1185RPM, 3PH, 60HZ, 404T, A40064M, TEFC
Class - CLI GP A,B,C,D
Division - Division II

Copyright © All product information within this document is subject to ABB Motors and Mechanical Inc. copyright © protection, unless otherwise noted.
9/9/2026 2:03:55 PM

Specifications

Enclosure	TEFC
Frame	404T
Frame Material	Iron
Frequency	60.00 Hz
Haz Area Class and Group	CLI GP A,B,C,D
Haz Area Division	Division II
Motor Letter Type	Three Phase
Output @ Frequency	60.000 HP @ 60 HZ
Phase	3
Synchronous Speed @ Frequency	1200 RPM @ 60 HZ
Voltage @ Frequency	460.0 V @ 60 HZ
Agency Approvals	CCSAUSEEV
Ambient Temperature	40 °C
Auxiliary Box	NO AUXILLARY BOX
Base Indicator	Rigid
Bearing Grease Type	Polyrex EM (-20F +300F)
Constant Torque Speed Range	6-60
Current @ Voltage	69.000 A @ 460.0 V
Design Code	B
Drip Cover	No Drip Cover
Duty Rating	CONT
Efficiency @ 100% Load	95.0 %
Feedback Device	NO FEEDBACK
Haz Area Temp Code	T3A
Heater Indicator	No Heater
High Voltage Full Load Amps	69.0 a
Insulation Class	F
Inverter Code	Inverter Ready
KVA Code	G
Lifting Lugs	Standard Lifting Lugs
Motor Lead Quantity/Wire Size	3 @ 4 AWG
Motor Standards	NEMA

Part Detail

Revision	P
Type	AC
Mech. spec.	
Base	
Status	PRD/A
Elec. spec.	A40WG0115
Layout	617429-501
Eff. date	10-24-2024
CD Diagram	416820-036
Poles	06
Leads	3#4
Proprietary	False
Created date	07-15-2013

Motor Type	A40064M
Mounting Arrangement	F1
Number of Poles	6
Overall Length	38.20 IN
Power Factor	86
Pulley End Bearing Type	Ball
Pulley Face Code	Standard
Service Factor	1.15
Shaft Diameter	2.875 IN
Shaft Ground Indicator	No Shaft Grounding
Shaft Rotation	Reversible
Shaft Slinger Indicator	Shaft Slinger
Speed	1185 rpm
Speed Code	Single Speed
Starting Method	Direct on line
Thermal Device - Bearing	None
Thermal Device - Winding	None

Nameplate

NP3238												
CAT NO	ECP4403T-4			**SPEC NO.**	P40G3908							
HP	60	**AMPS**	69		**VOLTS**	460			**DESIGN**	B		
FRAME	404T	**RPM**	1185	**HZ**	60	**AMB**	40	**SF**	1.15			
D.E. BRG.DATA	6316			**O.D.E. BRG.DATA**		6316		**PH**	3	**DUTY**	CONT	**INSUL.CLASS** F
D.E. BRG.	80BC03J30X			**TYPE**	P	**ENCL**	TEFC	**CODE**	G			
O.D.E. BRG.	80BC03J30X			**POWER FACTOR**		86		**NEMA NOM EFFICIENCY**			95	
3/4 LOAD EFF.	95.2			**MAX CORR KVAR**		12.5		**GUARANTEED EFFICIENCY**			94.1	
TEMP CODE	T3A	**TEMP =**	180									
CHP HZ	60-90	**CT HZ**	6-60	**VT HZ**		0-60						
INVERTER-TEMP-CODE	T3A											
SER.NO.				**MOTOR WEIGHT**								

REL. S.O.	RPM 1185	S.F. 1.15	ROTOR 418142-71EE
FRAME 404T	VOLTS 460	NEMA DESIGN B	TEST S.O. TYPICAL DATA
HP 60	AMPS 69	CODE LETTER G	TEST DATE ---
TYPE P	DUTY CONT	ENCLOSURE TEFC	STATOR RES.@ 25 ℃.108
PHASE/HERTZ 3/60	AMB ℃/INSUL 40/F	E/S 595761	OHMS (BETWEEN LINES)

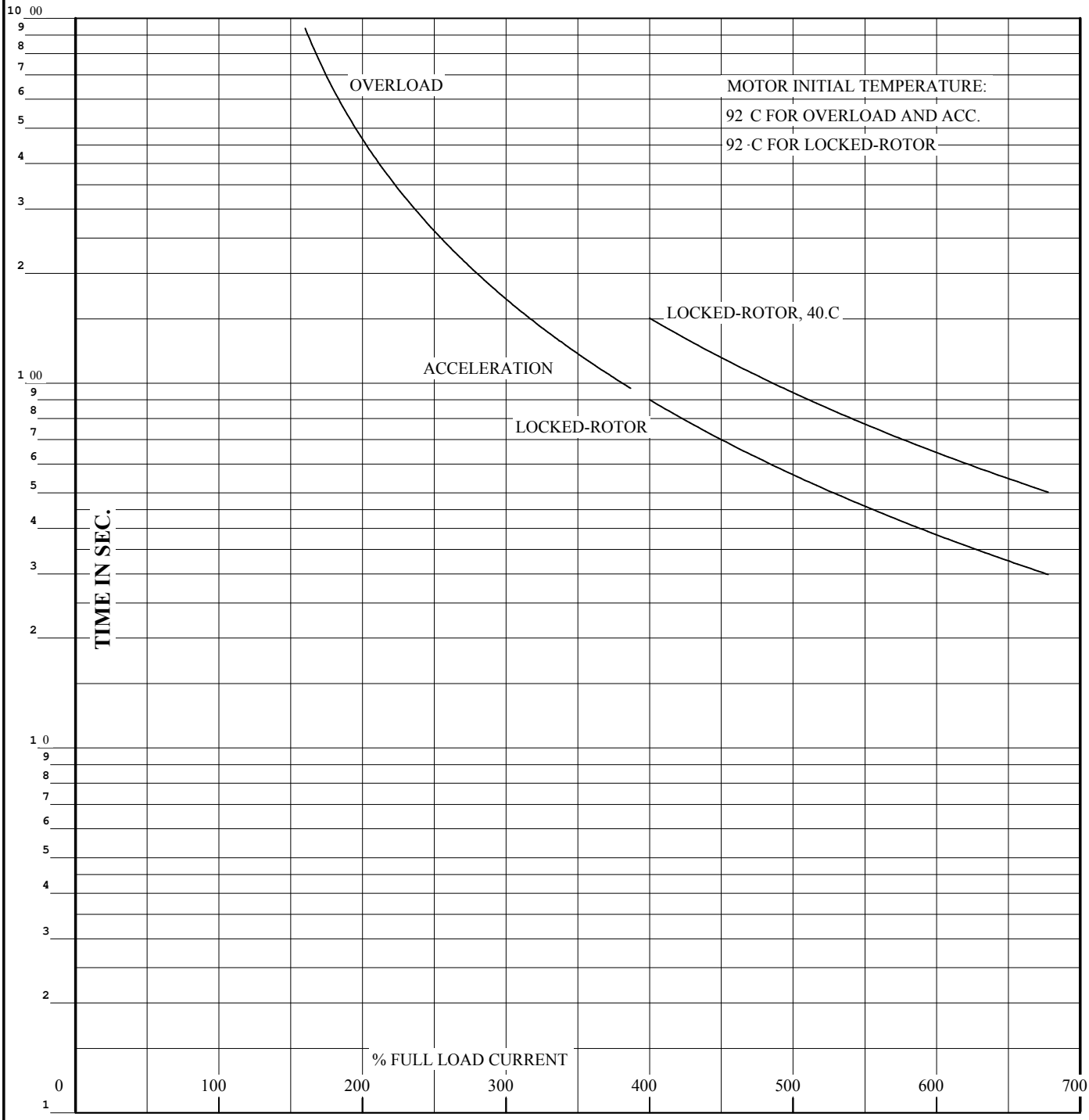

THERMAL LIMIT CURVE

REMARKS: XE MOTOR-NEMA NOM. EFF. 95.0 %

GUARANTEED MIN. EFF. 94.5%

AMPERES SHOWN FOR 460 **VOLT CONNECTION, IF OTHER VOLTAGE CONNECTIONS ARE AVAILABLE, THE AMPERES WILL VARY INVERSELY WITH THE RATED VOLTAGE.**

BALDOR
A MEMBER OF THE ABB GROUP

DR. BY	B.R.PENDLEY
CK. BY	D.M.BYRD
APP. BY	D.M.BYRD
DATE	02/06/92

A-C MOTOR PERFORMANCE CURVES **A40WG0115-R001**

ISSUE DATE 06/16/2011

ABB BALDOR RELIANCE

CUSTOMER INFORMATION PACKET ECP4403T-4 - 60HP, 1185RPM, 3PH, 60HZ, 404T, A40064M, TEFC

FRAME 404T	RPM 1185	S.F. 1.15	ROTOR 418142-71EE
HP 60	VOLTS 460	NEMA DESIGN B	TEST S.O. TYPICAL DATA
TYPE P	AMPS 69	CODE LETTER G	TEST DATE ---
PHASE/HERTZ 3/60	DUTY CONT	ENCLOSURE TEFC	STATOR RES.@ 25 ℃ .108
	AMB ℃/INSUL 40/F	E/S 595761	OHMS (BETWEEN LINES)

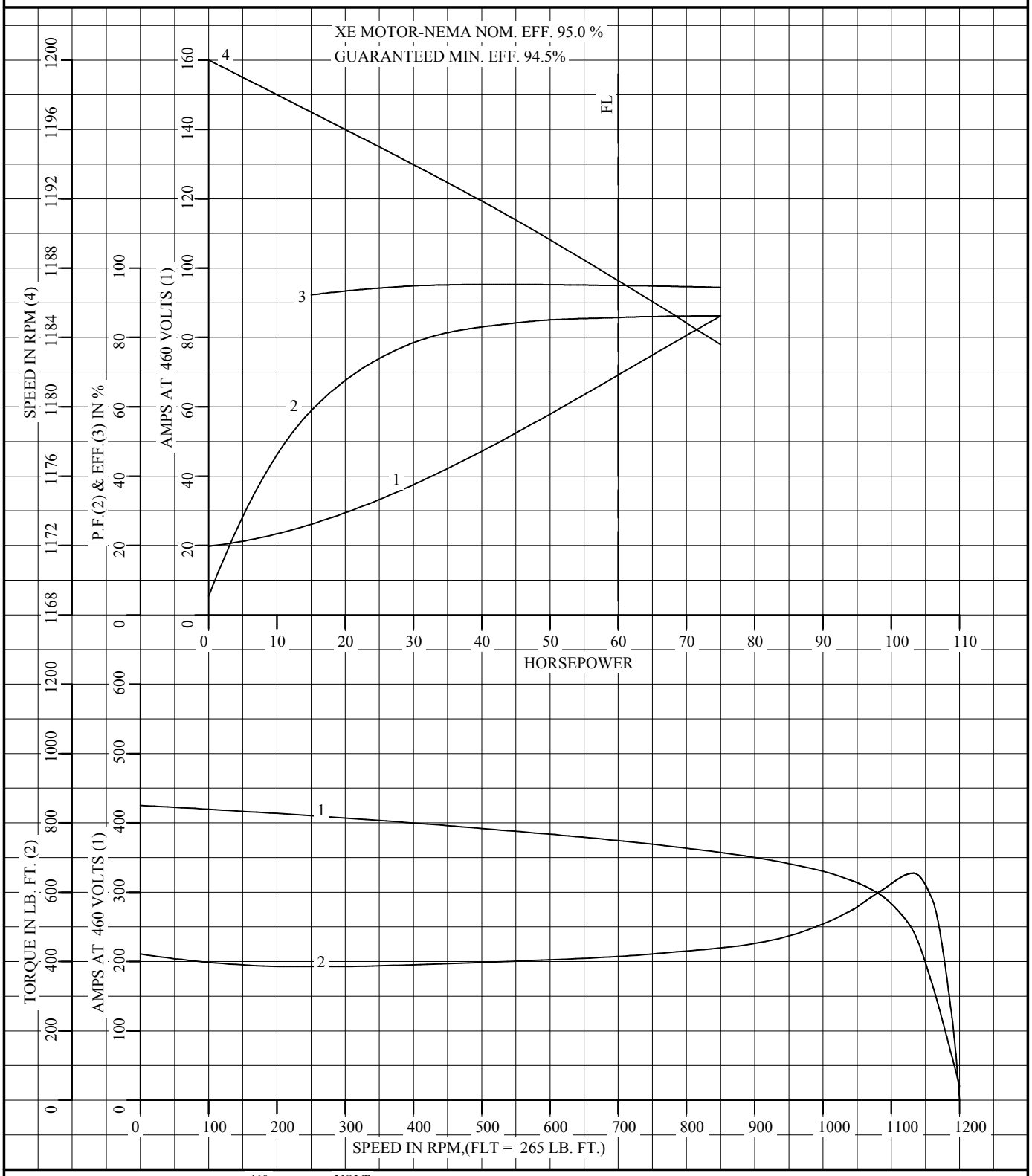

AMPERES SHOWN FOR 460 VOLT CONNECTION, IF OTHER VOLTAGE CONNECTIONS ARE AVAILABLE, THE AMPERES WILL VARY INVERSELY WITH THE RATED VOLTAGE.

BALDOR
A MEMBER OF THE ABB GROUP

DR. BY	B.R.PENDLEY
CK. BY	D.M.BYRD
APP. BY	D.M.BYRD
DATE	02/06/92

A-C MOTOR PERFORMANCE CURVES A40WG0115-R001 ISSUE DATE 06/16/2011

REL. S.O.	FRAME	HP	TYPE	PHASE/ HERTZ	RPM	VOLTS
	404T	60	P	3/60	1185	460

AMPS	DUTY	AMB °C/ INSUL.	S.F.	NEMA DESIGN	CODE LETTER	ENCL.
69	CONT	40/F	1.15	B	G	TEFC

E/S	ROTOR	TEST S.O.	TEST DATE	STATOR RES.@25 °C OHMS (BETWEEN LINES)
595761	418142-71EE	---	---	.108

PERFORMANCE

LOAD	HP	AMPERES	RPM	% POWER FACTOR	% EFFICIENCY
NO LOAD	0	19.9	1200	5.36	0
1/4	15.0	25.9	1197	58.9	92.3
2/4	30.0	37.7	1194	78.5	94.9
3/4	45.0	52.5	1191	84.2	95.2
4/4	60.0	69.0	1187	85.8	95.0
5/4	75.0	86.3	1184	86.2	94.4

SPEED TORQUE

	RPM	TORQUE % FULL LOAD	TORQUE LB.-FT.	AMPERES
LOCKED ROTOR	0	159	422	425
PULL UP	240	145	385	411
BREAKDOWN	1133	247	655	243
FULL LOAD	1187	100	265	69.0

AMPERES SHOWN FOR 460. VOLT CONNECTION. IF OTHER VOLTAGE CONNECTIONS ARE AVAILABLE, THE AMPERES WILL VARY INVERSELY WITH THE RATED VOLTAGE

REMARKS: TYPICAL DATA
XE MOTOR-NEMA NOM. EFF. 95.0 %
GUARANTEED MIN. EFF. 94.5%

BALDOR
A MEMBER OF THE ABB GROUP

DR. BY B.R.PENDLEY
CK. BY D.M.BYRD
APP. BY D.M.BYRD
DATE 02/06/92

A-C MOTOR PERFORMANCE DATA A40WG0115-R001
ISSUE DATE 06/16/20

617429-501

DUTY MASTER ALTERNATING CURRENT MOTORS

SQUIRREL-CAGE INDUCTION

ENCLOSURE: TOTALLY ENCLOSED

MOUNTING: FOOT

FRAME G405T ABOVE NEMA RATINGS

INCLUDES 404T FRAME MOUNTING HOLES

COOLING: FAN COOLED

XT/ECP SEVERE DUTY ENCLOSURE

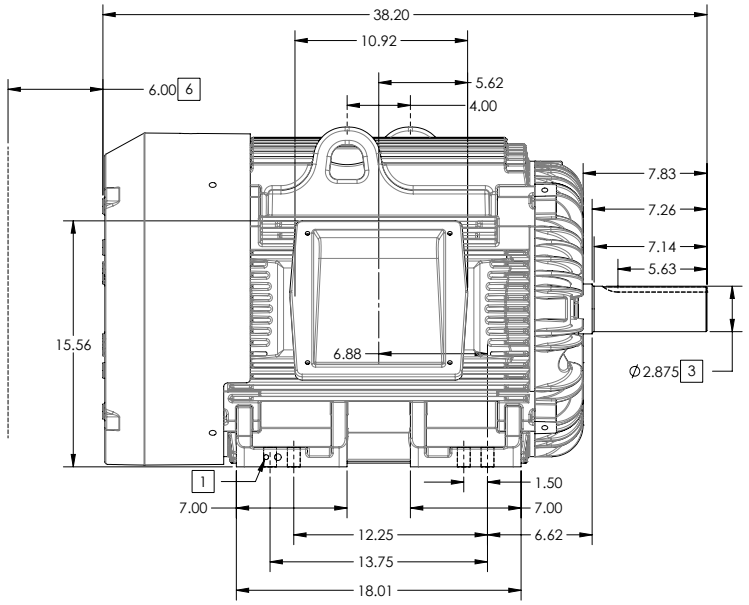

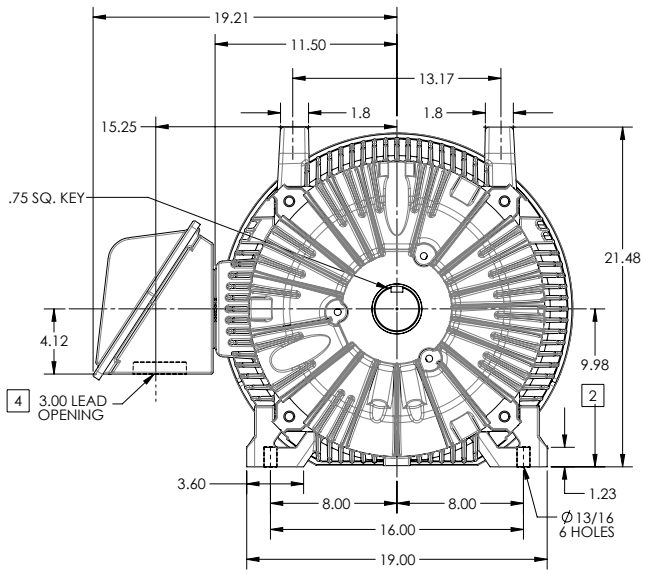

1. GROUND HOLES QTY 1 1/2-13 TAP; QTY 1 3/8-16 TAP
2. VARIES +.00,-.06
3. VARIES +.000,-.001
4. ON STANDARD MOTORS THIS IS CONDUIT SIZE. ON XT AND CORROSION PROOF MOTOR THIS IS PIPE TAP.
5. MOTOR WEIGHTS MAY VARY BY 15% DEPENDING ON RATING.
6. OBSTRUCTION MUST NOT ENCROACH ON AIR INLET

CONDUIT BOX LOCATED ON OPPOSITE SIDE WHEN F-2.
IF MOUNTING CLEARANCE DETAILS ARE REQUIRED, CONSULT FACTORY.
MAXIMUM PERMISSIBLE SHAFT RUNOUT WHEN MEASURED AT END OF STANDARD SHAFT EXTENSION IS .003" T.I.R. TO 5 INCH DIA.

5 WEIGHT (LBS): 1370

DIMENSIONS ARE IN INCHES; SEE SHEET 2 FOR DIMENSIONS IN MILLIMETERS

CUSTOMER IS RESPONSIBLE FOR DETERMINING THAT MOTOR PERFORMANCE IS SUITABLE IN THE APPLICATION.

SHEET NUMBER 1 OF 2

617429-501

REV. DESC: CHANGE BA FROM 6.76 TO 6.62			
REV: B	VERSION: 02	REVISED: 01:11:16 04/14/2014	TDR: 000000848770
MODEL NO. 617429-501			REF:
BY: MGHJMZ2	Material:		C

BALDOR

G405T/404T STD – FOOTED – XT/ECP SEVERE DUTY ENCLOSURE

617429-501

617429-501

DUTY MASTER ALTERNATING CURRENT MOTORS

SQUIRREL-CAGE INDUCTION

ENCLOSURE: TOTALLY ENCLOSED

MOUNTING: FOOT

FRAME G405T ABOVE NEMA RATINGS

INCLUDES 404T FRAME MOUNTING HOLES

COOLING: FAN COOLED

XT/ECP SEVERE DUTY ENCLOSURE

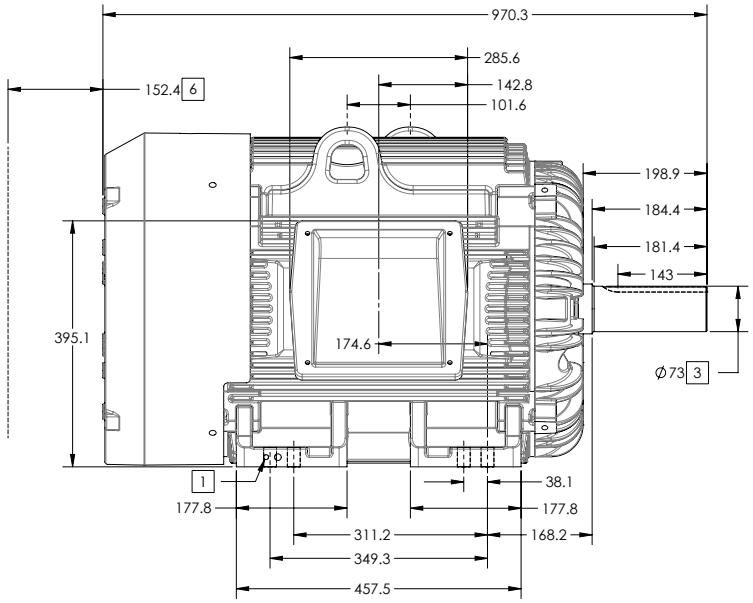

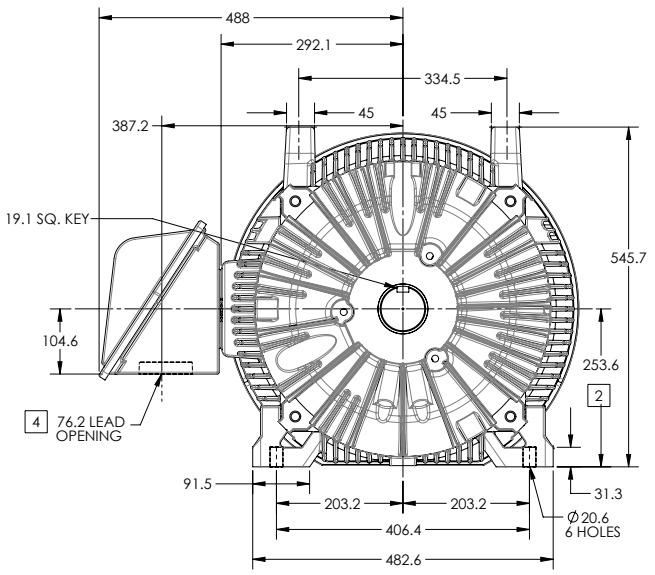

1. GROUND HOLES QTY 1 1/2-13 TAP; QTY 1 3/8-16 TAP
2. VARIES +.0,-1.5
3. VARIES +.00,-.03
4. ON STANDARD MOTORS THIS IS CONDUIT SIZE. ON XT AND CORROSION PROOF MOTOR THIS IS PIPE TAP.
5. MOTOR WEIGHTS MAY VARY BY 15% DEPENDING ON RATING.
6. OBSTRUCTION MUST NOT ENCROACH ON AIR INLET

CONDUIT BOX LOCATED ON OPPOSITE SIDE WHEN F-2.
IF MOUNTING CLEARANCE DETAILS ARE REQUIRED, CONSULT FACTORY.
MAXIMUM PERMISSIBLE SHAFT RUNOUT WHEN MEASURED AT END OF STANDARD SHAFT EXTENSION IS .08 MM T.I.R. TO 127 MM DIA.

5 WEIGHT (KGS): 630

DIMENSIONS ARE IN MILLIMETERS; SEE SHEET 1 FOR DIMENSIONS IN INCHES

CUSTOMER IS RESPONSIBLE FOR DETERMINING THAT MOTOR PERFORMANCE IS SUITABLE IN THE APPLICATION.

SHEET NUMBER 2 OF 2

617429-501

REV. DESC: CHANGE BA FROM 6.76 TO 6.62			
REV: B	VERSION: 02	REVISED: 01:11:16 04/14/2014	TDR: 000000848770
MODEL NO. 617429-501			REF:
BY: MGHJMZ2	Material:		C

BALDOR

G405T/404T STD – FOOTED – XT/ECP SEVERE DUTY ENCLOSURE

617429-501

416820–036

A–C MOTOR
CONNECTION DIAGRAM
STANDARD 3 LEAD CONNECTED

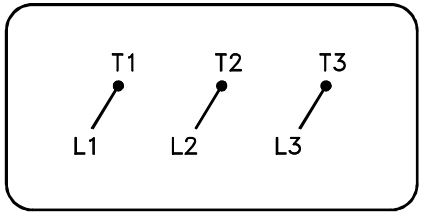

(N.P. 1575–BA)

416820–036

REV. DESC: LOADED TO BUS, C/R 335225			BALDOR
REV. LTR: –	VERSION: 00	TDR: 000000538207	
FILE: \MGA\00000\682		REVISED: 11:54:06 04/30/2010	CONN DIAG – STANDARD 3 LEAD
MTL: –		BY: RAGRA	SH 1 of 1