ABB BALDOR RELIANCE

Customer information packet

ECP2276T-5

7.5HP, 1180RPM, 3PH, 60HZ, 254T, 0954M, TEFC, F
Class - CLI GP A,B,C,D
Division - Division II

Copyright © All product information within this document is subject to ABB Motors and Mechanical Inc. copyright © protection, unless otherwise noted.
10/6/2026 7:18:50 PM

Specifications

Enclosure	TEFC
Frame	254T
Frame Material	Iron
Frequency	60.00 Hz
Haz Area Class and Group	CLI GP A,B,C,D
Haz Area Division	Division II
Motor Letter Type	Three Phase
Output @ Frequency	7.500 HP @ 60 HZ
Phase	3
Synchronous Speed @ Frequency	1200 RPM @ 60 HZ
Voltage @ Frequency	575.0 V @ 60 HZ
Agency Approvals	CSA EEV
	NEMA PREMIUM
	NEMA_PREMIUM
	UR
	CCSA US
Ambient Temperature	40 °C
Auxiliary Box	NO AUXILLARY BOX
Auxiliary Box Lead Termination	None
Base Indicator	Rigid
Bearing Grease Type	Polyrex EM (-20F +300F)
Blower	None
Constant Torque Speed Range	1.0
Current @ Voltage	8.700 A @ 575.0 V
Design Code	A
Drip Cover	No Drip Cover
Duty Rating	CONT
Efficiency @ 100% Load	91.7 %
Electrically Isolated Bearing	Not Electrically Isolated
Enclosure Modification	Severe Duty Features
Feedback Device	NO FEEDBACK
Front Face Code	Standard

Part Detail

Revision	AY
Type	AC
Mech. spec.	09J371
Base	
Status	PRD/A
Elec. spec.	09WGY264
Layout	09LYJ371
Eff. date	09-16-2025
CD Diagram	CD0006
Poles	06
Leads	3#12
Proprietary	False
Created date	08-29-2010

Front Shaft Indicator	None
Haz Area Temp Code	T3C
Heater Indicator	No Heater
High Voltage Full Load Amps	8.7 a
Insulation Class	F
Inverter Code	Inverter Ready
KVA Code	J
Lifting Lugs	Standard Lifting Lugs
Locked Bearing Indicator	Locked Bearing
Max Speed	1800 rpm
Motor Lead Exit	Ko Box
Motor Lead Quantity/Wire Size	3 @ 12 AWG
Motor Lead Termination	Flying Leads
Motor Standards	NEMA
Motor Type	0954M
Mounting Arrangement	F1
Number of Poles	6
Overall Length	24.78 IN
Power Factor	71
Product Family	Super-E Chemical Processing
Pulley End Bearing Type	Ball
Pulley Face Code	Standard
Pulley Shaft Indicator	Standard
Rodent Screen	None
Service Factor	1.15
Shaft Diameter	1.625 IN
Shaft Extension Location	Pulley End
Shaft Ground Indicator	No Shaft Grounding
Shaft Rotation	Reversible
Shaft Slinger Indicator	Shaft Slinger
Speed	1180 rpm
Speed Code	Single Speed
Starting Method	Direct on line
Thermal Device - Bearing	None

Thermal Device - Winding	None
Vibration Sensor Indicator	No Vibration Sensor
Winding Thermal 1	None
Winding Thermal 2	None

Nameplate

NP3995ABBL

CAT #	ECP2276T-5	**SER**		**CC**	010A						
SPEC	09J371Y264	**RATING**	40C AMB-CONT								
HZ	**VOLTS**	**AMPS**	**RPM**	**HP**	**CODE**	**SF**	**DES**	**PF**		**NEMA NOM. EFF**	
60	575	8.7	1180	7.5	J	1.15	A	71	%	91.7	%
									%		%

PH	3	**CL**	F	**MAX RPM**	1800	**MAX CORR KVAR**	4	**USABLE AT 208V**	N/A
IP55	**FR**	254T	**ENCL**	TEFC	**DE BRG**	6309	**ODE BRG**	6309	
GREASE	POLYREX EM				**MTR WT**	333	**LBS**		
USABLE AT	N/A								

CL I DIV 2 GRPS A,B,C,D		**CL I ZONE 2 GRPS**				**IIA,IIB,IIC**		**TEMP T**	160	**C**	
1.0 SF ON PWM INVERTER		**POWER**		**INV TEMP CL**	180	**C**					
CHP	60-90	**HZ**	1.5:1	**CT**	1.0-60	**HZ**	60:1	**VT**	0-60	**HZ**	1000:1
SPACE HEATER LEADS H1-H2:		**TIE LIKE NUMBERS**		**TOGETHER**							
V		**A**		**W**		**MAX SPACE HEATER TEMP**					

Accessories

Part number	Description	Multiplier
09-1309	C FACE KIT	A8

AC Induction Motor Performance Data
Record # 1931
Typical performance - not guaranteed values

Winding: 09WGY264-R001	**Type:** 0954M	**Enclosure:** TEFC

Nameplate Data				**575 V, 60 Hz: Single Voltage Motor**	
Rated Output (HP)			7.5	**Full Load Torque**	33.3 LB-FT
Volts			575	**Start Configuration**	direct on line
Full Load Amps			8.7	**Breakdown Torque**	102 LB-FT
R.P.M.			1180	**Pull-up Torque**	41 LB-FT
Hz	60	**Phase**	3	**Locked-rotor Torque**	60 LB-FT
NEMA Design Code	A	**KVA Code**	J	**Starting Current**	58 A
Service Factor (S.F.)			1.15	**No-load Current**	4.6 A
NEMA Nom. Eff.	91.7	**Power Factor**	71	**Line-line Res. @ 25ºC**	1.37 Ω
Rating - Duty			40C AMB-CONT	**Temp. Rise @ Rated Load**	32°C
S.F. Amps				**Temp. Rise @ S.F. Load**	42°C
				Locked-rotor Power Factor	26
				Rotor inertia	4.34 lb-ft²

Load Characteristics 575 V, 60 Hz, 7.5 HP

% of Rated Load	**25**	**50**	**75**	**100**	**125**	**150**	**S.F.**
Power Factor	33	53	61	71	78	80	75
Efficiency	84.9	90.6	91.8	91.9	91.4	90.5	91.6
Speed	1196	1192	1188	1183	1178	1173	1180
Line amperes	5.1	5.9	7.5	8.7	9.8	11.5	9.36

ABB Motors and Mechanical Inc.

WINDING # 09WGY264

7.5 HP 3 PH 60 HZ 1180 RPM 575 V 0954M

TORQUES(LB-FT): PO=102 PU=41 LR=60 LRA=58

Typical performance - not guaranteed values.

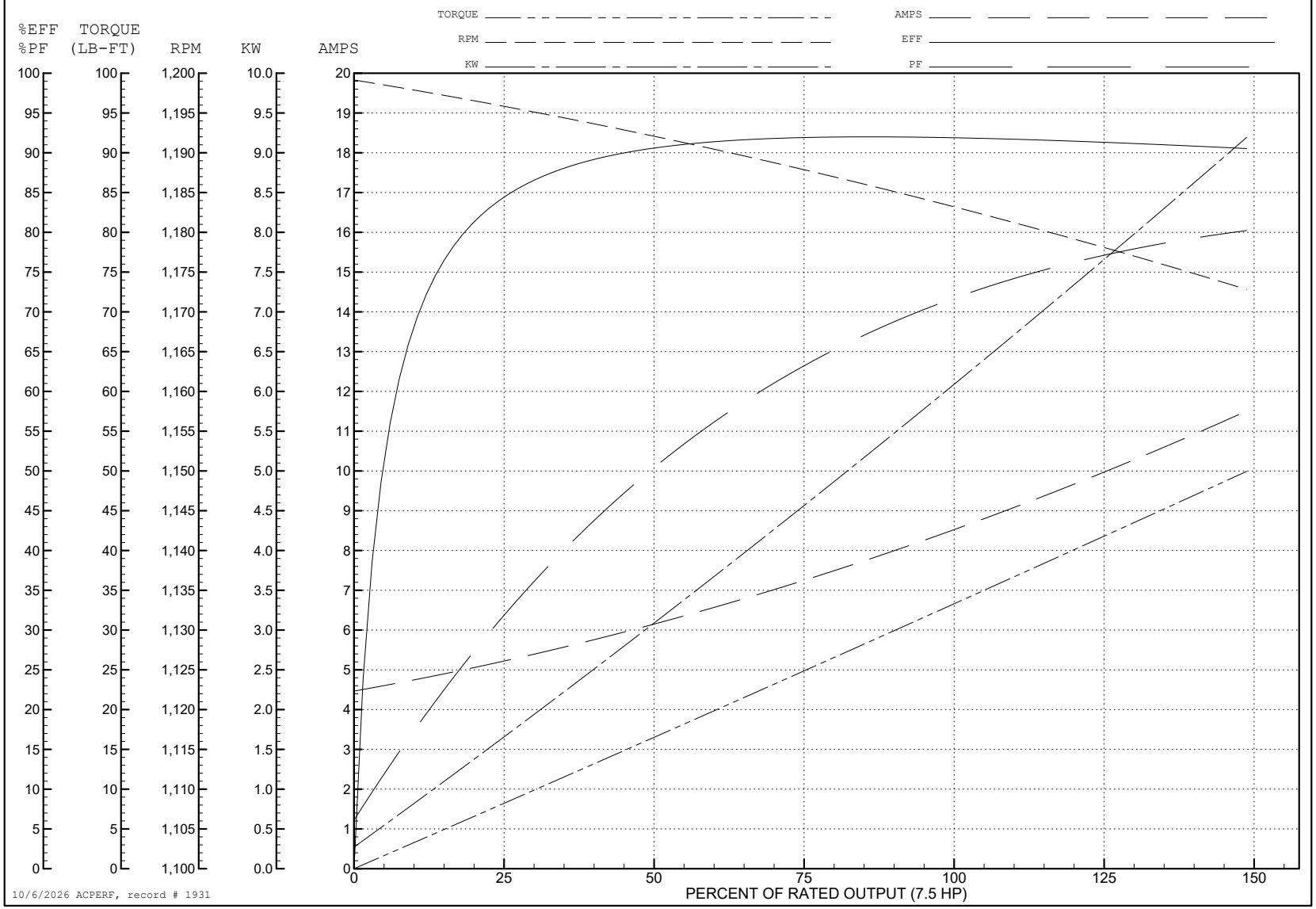

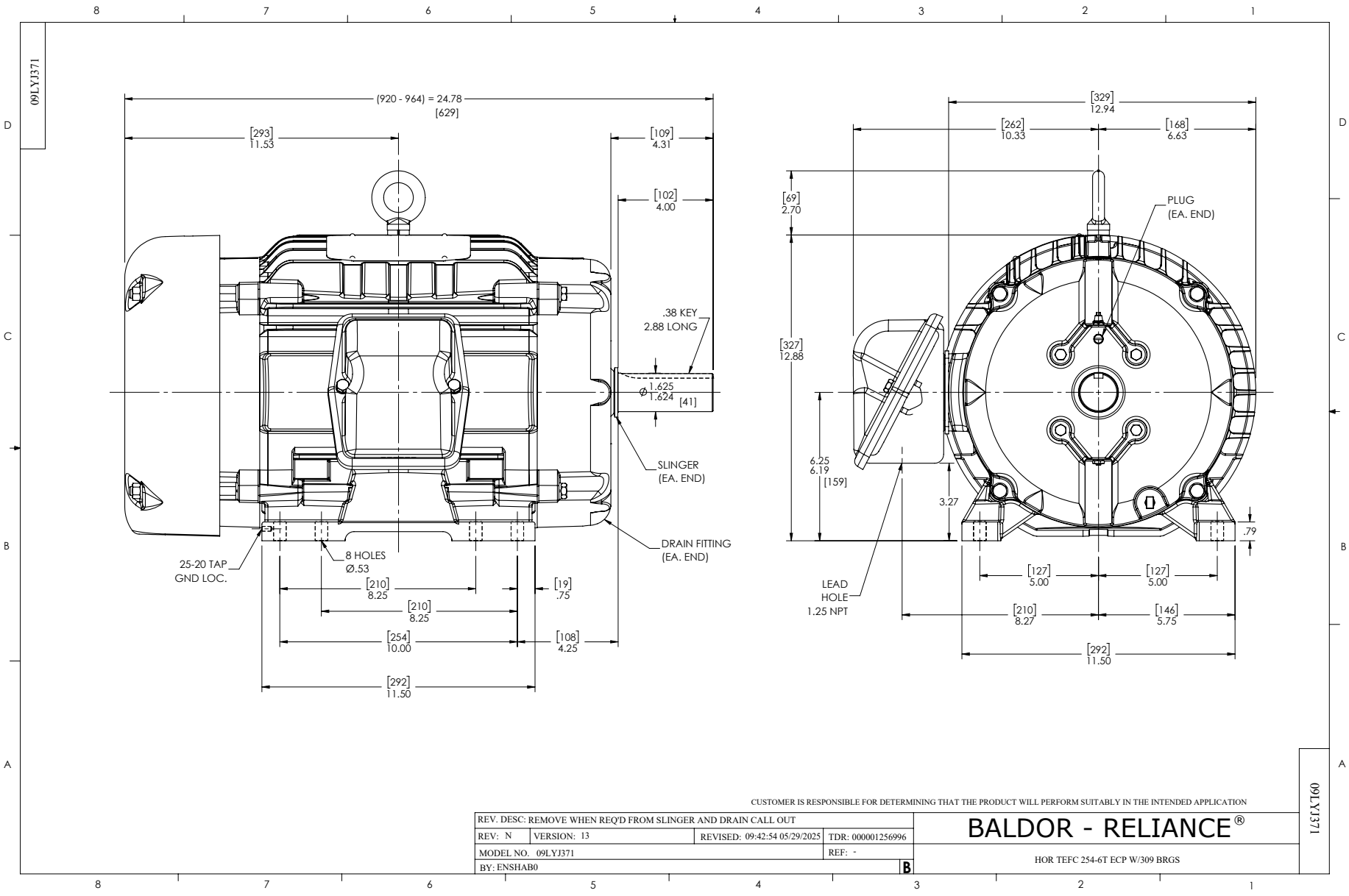
09LYJ371
(920 - 964) = 24.78
[629]
[293]
11.53
[109]
4.31
[102]
4.00
.38 KEY
2.88 LONG
Ø 1.625
1.624 [41]
SLINGER
(EA. END)
DRAIN FITTING
(EA. END)
25-20 TAP
GND LOC.
8 HOLES
Ø.53
[210]
8.25
[210]
8.25
[19]
.75
[254]
10.00
[108]
4.25
[292]
11.50
[329]
12.94
[262]
10.33
[168]
6.63
[69]
2.70
PLUG
(EA. END)
[327]
12.88
6.25
6.19
[159]
3.27
.79
LEAD
HOLE
1.25 NPT
[127]
5.00
[127]
5.00
[210]
8.27
[146]
5.75
[292]
11.50
CUSTOMER IS RESPONSIBLE FOR DETERMINING THAT THE PRODUCT WILL PERFORM SUITABLY IN THE INTENDED APPLICATION
REV. DESC: REMOVE WHEN REQ'D FROM SLINGER AND DRAIN CALL OUT
REV: N
VERSION: 13
REVISED: 09:42:54 05/29/2025
TDR: 000001256996
MODEL NO. 09LYJ371
REF: -
BY: ENSHAB0
B
BALDOR - RELIANCE®
HOR TEFC 254-6T ECP W/309 BRGS
09LYJ371

CD0006

TYPICAL WYE–CONNECTED MOTOR

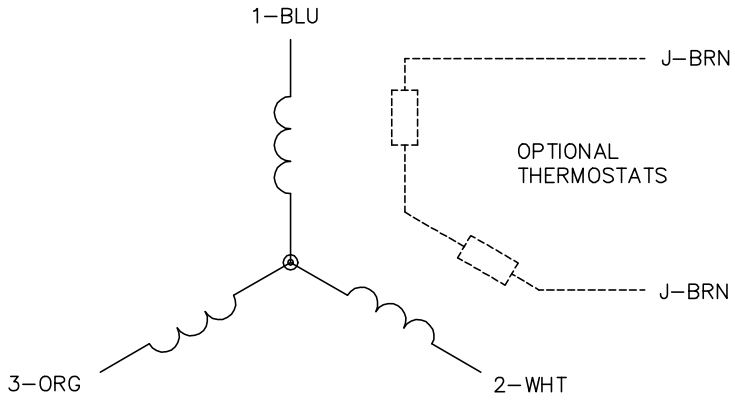

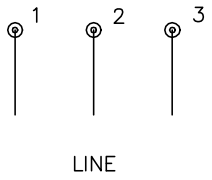

TYPICAL DELTA–CONNECTED MOTOR

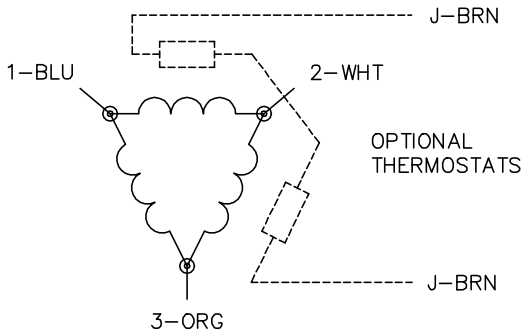

NOTES:

1. THREE LEAD MOTOR MAY BE EITHER WYE CONNECTED OR DELTA CONNECTED.
2. INTERCHANGE ANY TWO LINE LEADS TO REVERSE ROTATION.
3. OPTIONAL THERMOSTATS ARE PROVIDED WHEN SPECIFIED.
4. ACTUAL NUMBER OF INTERNAL PARALLEL CIRCUITS MAY VARY.
5. LEAD COLORS ARE OPTIONAL. LEADS MUST BE NUMBERED AS SHOWN.

CD0006

REV. DESC: ADD CLASS CONN00000007		
REV. LTR: E	VERSION: 01	TDR: 000001099922
FILE: \AAA\00005\141	REVISED: 10:24:49 02/19/2019	BY: ENBRIR0
MTL: –		

BALDOR - RELIANCE®

3PH, SV, 3 LEADS, WYE OR DELTA CONNECTED

SH 1 of 1