10LYF574

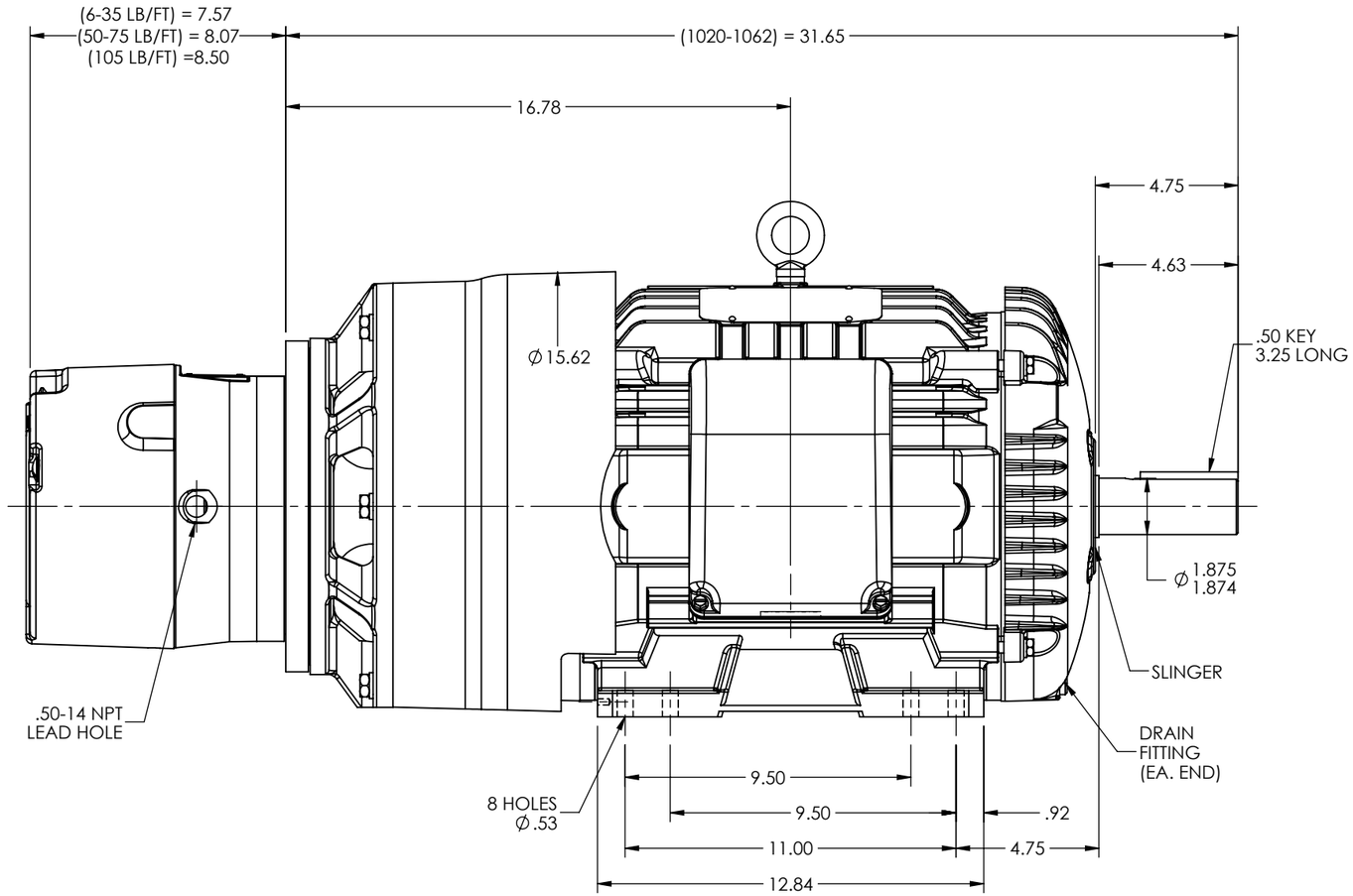

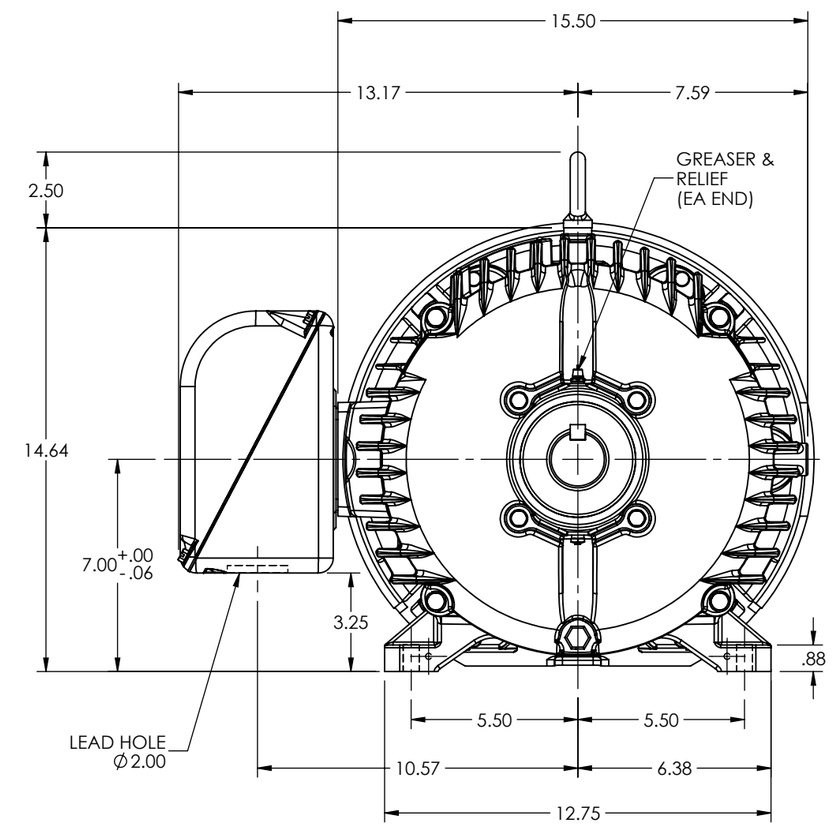

CUSTOMER IS RESPONSIBLE FOR DETERMINING THAT BALDOR'S PRODUCT WILL PERFORM SUITABLY IN THE INTENDED APPLICATION

REV. DESC: CONVERT STOCK LAYOUTS FROM AUTOCAD TO SWD			
REV: D	VERSION: 04	REVISED: 10:57:31 12/05/2023	TDR: 000001220227
MODEL NO. 10LYF574			REF: -
BY: USALMAZ			B

BALDOR

HORZ TEFC 284-6T W/BRAKE

10LYF574