36LYQ907

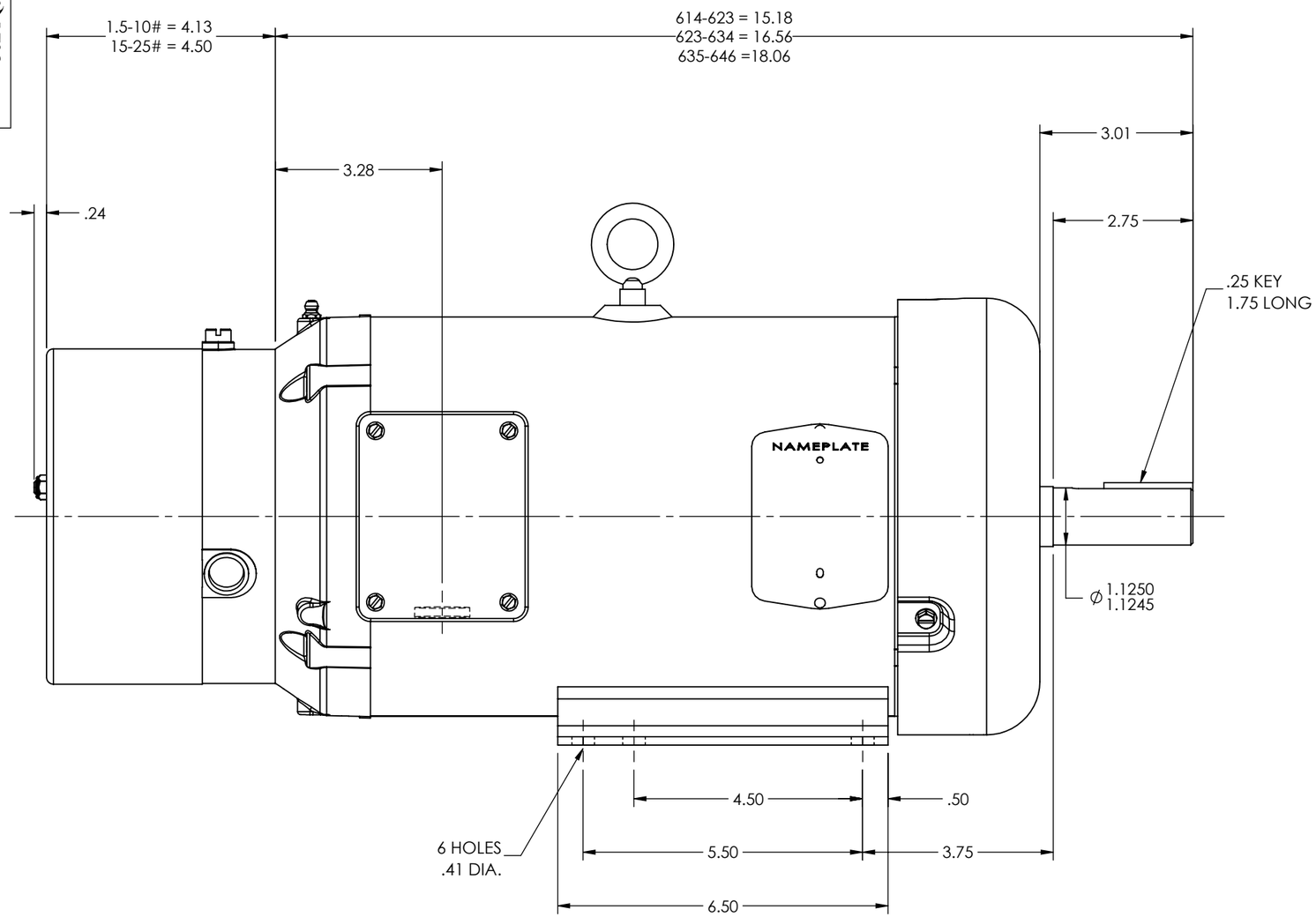

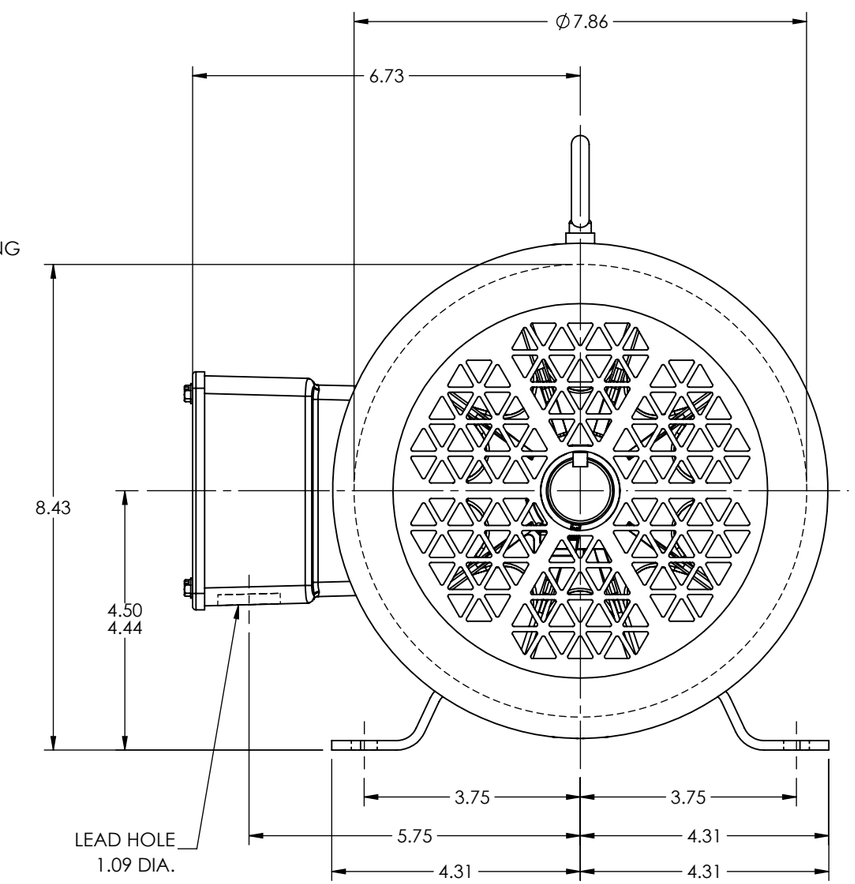

CUSTOMER IS RESPONSIBLE FOR DETERMINING THAT THE PRODUCT WILL PERFORM SUITABLY IN THE INTENDED APPLICATION

REV. DESC: CONVERT AUTOCAD DRW TO SWD DRW			
REV: B	VERSION: 02	REVISED: 10:54:58 03/17/2023	TDR: 000001203217
MODEL NO. 36LYQ907			REF: -
BY: ENALEM0			B

BALDOR - RELIANCE®

HOR 182-4T TEFC 36M W/96BK' DINGS 60 SERIES BRAKE

36LYQ907