ABB BALDOR RELIANCE

Customer information packet

DRX441264T

125HP, 1190RPM, 3PH, 60HZ, 445T, TEFC, F1
Class - CLI GP C,D
Division - Division I

Copyright © All product information within this document is subject to ABB Motors and Mechanical Inc. copyright © protection, unless otherwise noted.
11/29/2026 7:19:08 AM

Specifications

Enclosure	TEFC
Frame	445T
Frame Material	Iron
Frequency	60.00 Hz
Haz Area Class and Group	CLI GP C,D
Haz Area Division	Division I
Motor Letter Type	Three Phase
Output @ Frequency	125.000 HP @ 60 HZ
Phase	3
Synchronous Speed @ Frequency	1200 RPM @ 60 HZ
Voltage @ Frequency	460.0 V @ 60 HZ
Agency Approvals	UL
	CSA
	CCSAUSEEV
Ambient Temperature	40 °C
Auxiliary Box	NO AUXILLARY BOX
Base Indicator	Rigid
Bearing Grease Type	Polyrex EM (-20F +300F)
Constant Torque Speed Range	10-60
Current @ Voltage	144.000 A @ 460.0 V
Design Code	B
Drip Cover	No Drip Cover
Duty Rating	CONT
Efficiency @ 100% Load	95.0 %
Feedback Device	NO FEEDBACK
Haz Area Temp Code	T3C
Heater Indicator	No Heater
High Voltage Full Load Amps	144.0 a
Insulation Class	F
Inverter Code	Inverter Ready
IP Rating	NONE
KVA Code	G

Part Detail

Revision	A
Type	AC
Mech. spec.	
Base	
Status	PRD/A
Elec. spec.	A44WG2120
Layout	617426-001
Eff. date	05-06-2024
CD Diagram	416820-036
Poles	06
Leads	3#1
Proprietary	False
Created date	03-11-2019

Max Speed	2700 rpm
Motor Lead Quantity/Wire Size	3 @ 1 AWG
Motor Standards	NEMA
Motor Type	A44076M
Mounting Arrangement	F1
Number of Poles	6
Overall Length	44.97 IN
Power Factor	86
Product Family	General Industrial
Pulley End Bearing Type	Ball
Pulley Face Code	Standard
Service Factor	1.15
Shaft Diameter	3.375 IN
Shaft Ground Indicator	No Shaft Grounding
Shaft Rotation	Reversible
Shaft Slinger Indicator	Shaft Slinger
Speed	1190 rpm
Speed Code	Single Speed
Starting Method	Direct on line
Thermal Device - Bearing	None
Thermal Device - Winding	Normally Closed Thermostat

Nameplate

NP2496L
MOBIL POLYREX EM

000613006PC			
CLASS I GROUP	C D X	**NO.**	
CLASS II GROUP	X X X		
OPERATING TEMP CODE	T3C		

NP3140L											
SPEC NO.	A44-9130-2120		**CAT.NO.**	DRX441264T				**FRAME**	445T		
HP	125	**VOLTS**	460		**PHASE**	3	**DESIGN**	B	**TYPE**	P	
RPM	1190	**AMPS**	144		**HZ**	60	**AMB**	40	**SF**	1.00	
DRIVE END BEARING	90BC03J30X		**DUTY**	CONT			**INSUL.CLASS**	F			
OPP D.E. BEARING	90BC03J30X		**ENCL**	TEFC	**CODE**	G					
SF	1.15	**WK2**	59.4	**MAG CUR**	51.4		**RPM MAX**	2700			
CT HZ	10-60	**VT HZ**	0-60	**CHP HZ**	60-90		**NEMA-NOM-EFF**	95			
	SUIT FOR 55C AMB AT 1.00 SF					IP55					
SER.NO.				**MOTOR WEIGHT**							

REL. S.O.	FRAME	HP	TYPE	PHASE/ HERTZ	RPM	VOLTS
	445T	125	P	3/60	1190	460

AMPS	DUTY	AMB °C/ INSUL.	S.F.	NEMA DESIGN	CODE LETTER	ENCL.
144	CONT	40/F	1.15	B	G	TEFC

E/S	ROTOR	TEST S.O.	TEST DATE	STATOR RES.@25 °C OHMS (BETWEEN LINES)
599769	418143-080-GE	---	---	.0408

PERFORMANCE

LOAD	HP	AMPERES	RPM	% POWER FACTOR	% EFFICIENCY
NO LOAD	0	51.4	1200	4.76	0
1/4	31.3	61.8	1197	51.7	91.6
2/4	62.5	84.2	1195	73.5	94.6
3/4	93.7	112	1192	82.2	95.1
4/4	125	144	1189	85.8	95.0
5/4	156	178	1185	87.1	94.5

SPEED TORQUE

	RPM	TORQUE % FULL LOAD	TORQUE LB.-FT.	AMPERES
LOCKED ROTOR	0	141	777	911
PULL UP	180	127	701	893
BREAKDOWN	1143	277	1528	513
FULL LOAD	1189	100	552	144

AMPERES SHOWN FOR 460. VOLT CONNECTION. IF OTHER VOLTAGE CONNECTIONS ARE AVAILABLE, THE AMPERES WILL VARY INVERSELY WITH THE RATED VOLTAGE

REMARKS: TYPICAL DATA
XE - MOTOR; NEMA NOM. EFF.= 95.0 PCT.; GUAR MIN . EFF.= 94.1 PCT.

BALDOR
A MEMBER OF THE ABB GROUP

DR. BY M.C. BENTON
CK. BY S.E. WALLACE
APP. BY E.J.CHRISTIAN
DATE 04/09/90

A-C MOTOR PERFORMANCE DATA A44WG2120-R032
ISSUE DATE 04/30/21

REL S.O.	RPM 1190	S.F. 1.15	ROTOR 418143-080-GE
FRAME 445T	VOLTS 460	NEMA DESIGN B	TEST S.O. TYPICAL DATA
HP 125	AMPS 144	CODE LETTER G	TEST DATE ---
TYPE P	DUTY CONT	ENCLOSURE TEFC	STATOR RES.@ 25 °C .0408
PHASE/HERTZ 3/60	AMB °C/INSUL 40/F	E/S 599769	OHMS (BETWEEN LINES)

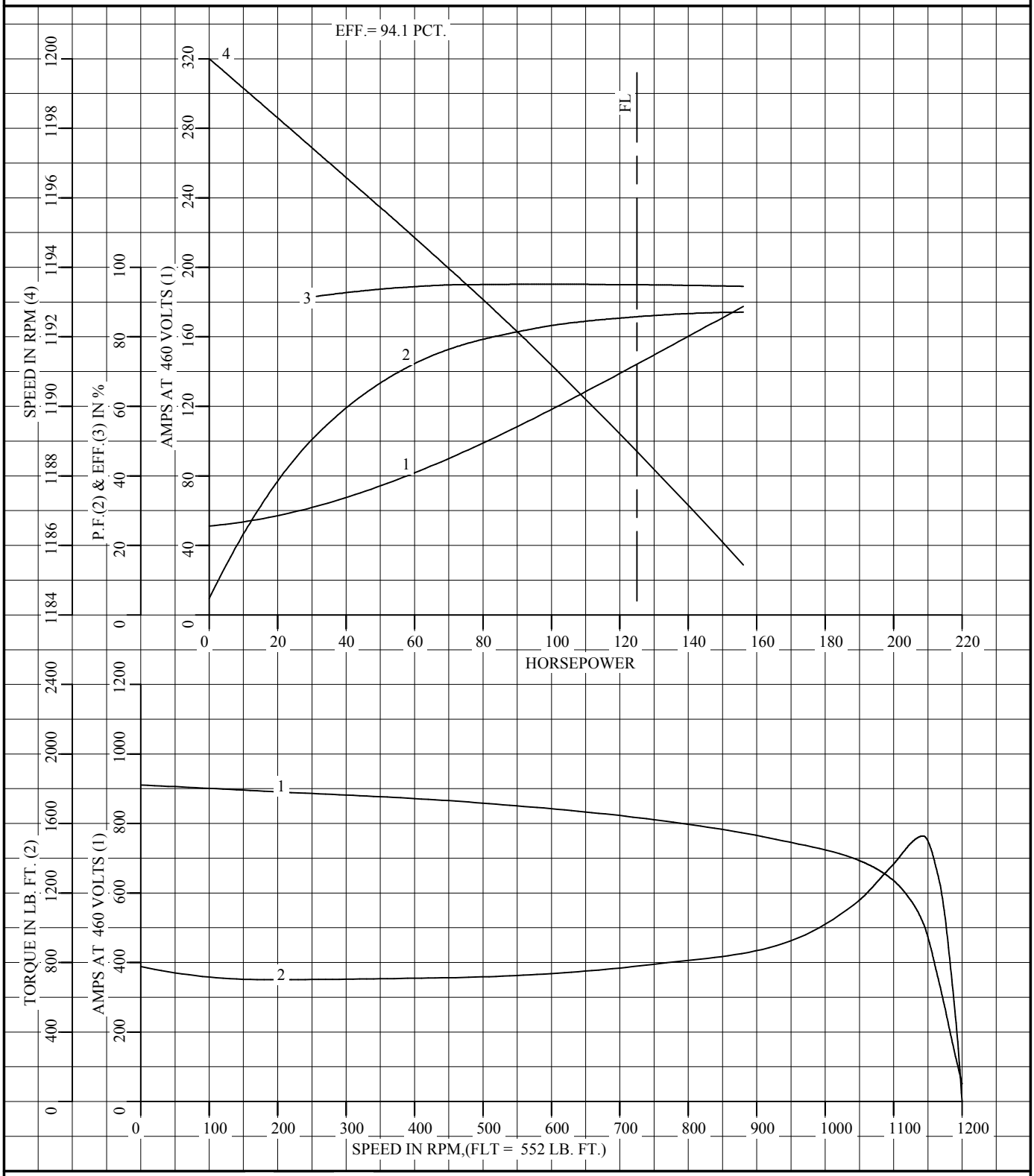

AMPERES SHOWN FOR 460 VOLT CONNECTION, IF OTHER VOLTAGE CONNECTIONS ARE AVAILABLE, THE AMPERES WILL VARY INVERSELY WITH THE RATED VOLTAGE.

BALDOR A MEMBER OF THE ABB GROUP

DR. BY	M.C. BENTON
CK. BY	S.E. WALLACE
APP. BY	E.J.CHRISTIAN
DATE	04/09/90

A-C MOTOR PERFORMANCE CURVES

A44WG2120-R032

ISSUE DATE 04/30/21

REL. S.O.		RPM	1190	S.F.	1.15	ROTOR	418143-080-GE
FRAME	445T	VOLTS	460	NEMA DESIGN	B	TEST S.O.	TYPICAL DATA
HP	125	AMPS	144	CODE LETTER	G	TEST DATE	---
TYPE	P	DUTY	CONT	ENCLOSURE	TEFC	STATOR RES.@ 25 °C.	.0408
PHASE/HERTZ	3/60	AMB °C/INSUL	40/F	E/S	599769		OHMS (BETWEEN LINES)

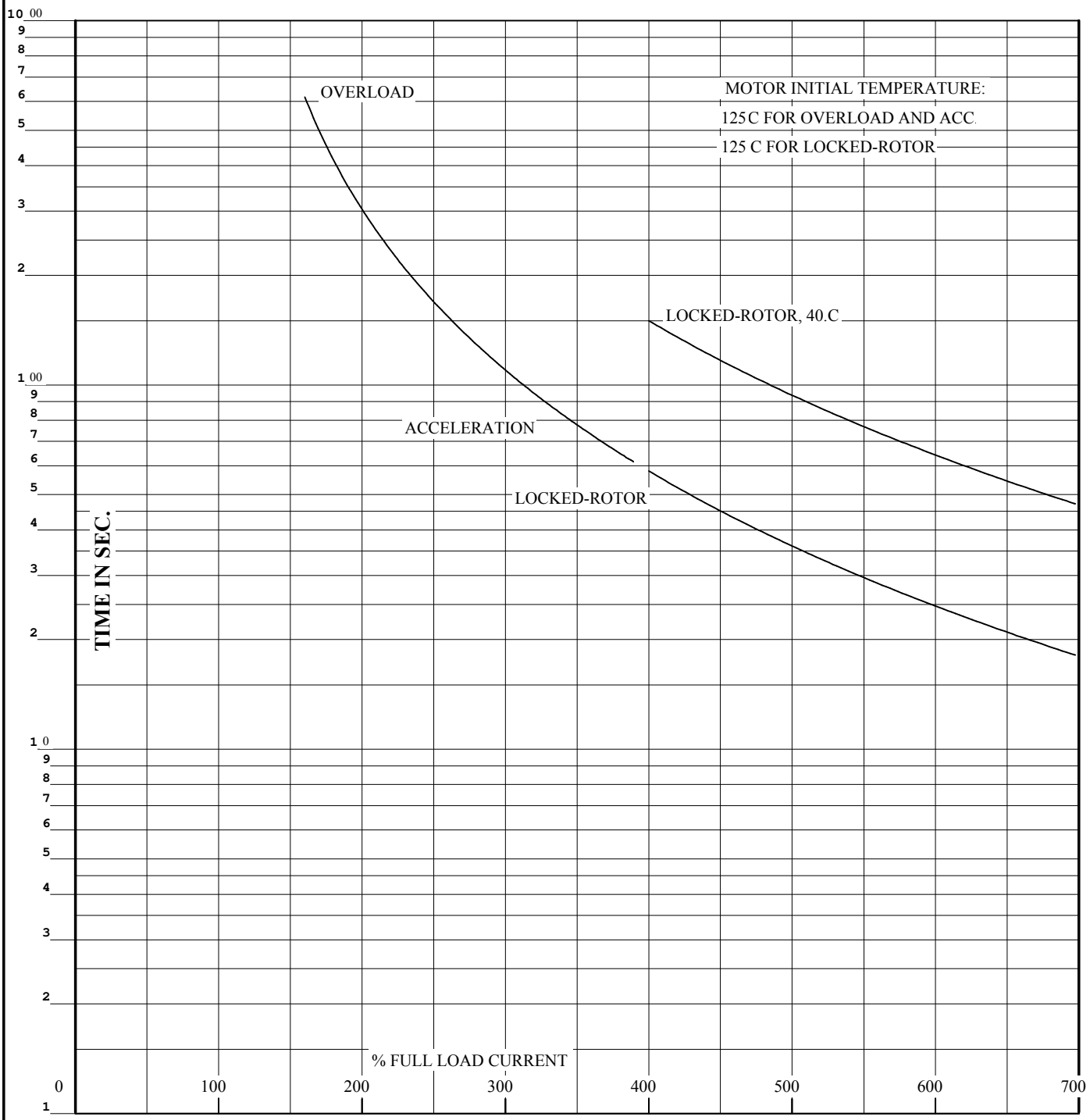

REMARKS: THERMAL LIMIT CURVE
EFF.= 94.1 PCT. .T CURVE

AMPERES SHOWN FOR 460 VOLT CONNECTION, IF OTHER VOLTAGE CONNECTIONS ARE AVAILABLE, THE AMPERES WILL VARY INVERSELY WITH THE RATED VOLTAGE.

BALDOR A MEMBER OF THE ABB GROUP

DR. BY	M.C. BENTON
CK. BY	S.E. WALLACE
APP. BY	E.J.CHRISTIAN
DATE	04/09/90

A-C MOTOR PERFORMANCE CURVES

A44WG2120-R032

ISSUE DATE 04/30/21

DUTY MASTER ALTERNATING CURRENT MOTORS

617426-001

ENCLOSURE: UL LISTED MOTOR

SQUIRREL-CAGE INDUCTION

MOUNTING: FOOT, F-1

G445T/G444T FRAME MOUNTING HOLES

COOLING: FAN COOLED

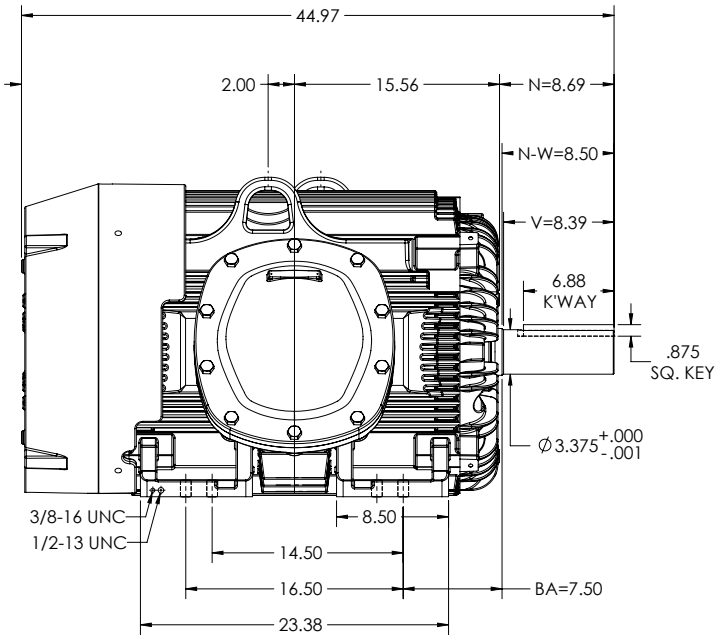

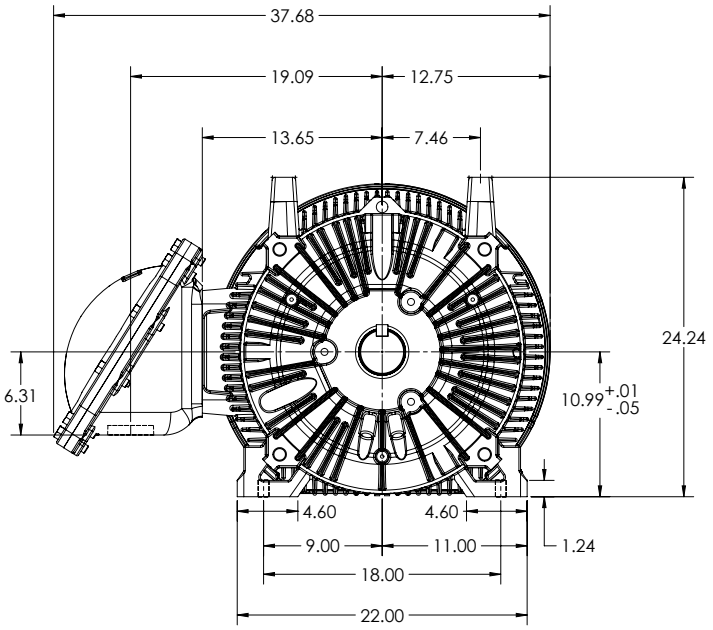

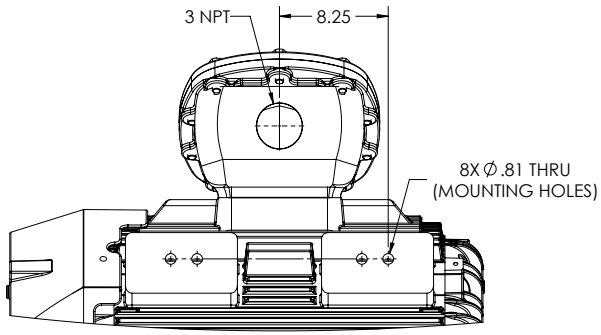

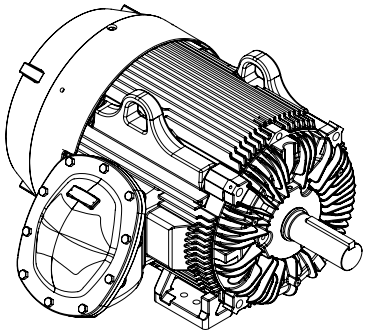

DIMENSIONS ARE IN INCHES; SEE SHEET 2 FOR DIMENSIONS IN MILLIMETERS.
WEIGHT (LBS): 2150, MOTOR WEIGHTS MAY VARY BY 15% DEPENDING ON RATING.
CUSTOMER IS RESPONSIBLE FOR DETERMINING THAT MOTOR PERFORMANCE IS SUITABLE IN THE APPLICATION.

1 OBSTRUCTION MUST NOT ENCROACH ON AIR INLET.

IF MOUNTING CLEARANCE DETAILS ARE REQUIRED, CONSULT FACTORY.
MAX PERMISSIBLE SHAFT RUNOUT WHEN MEASURED AT END OF STANDARD SHAFT EXTENSION IS .003" T.I.R.

SHEET NUMBER 1 OF 2

617426-001

REV. DESC: UPDATE DS QUALITY			
REV: D	VERSION: 04	REVISED: 10:29:12 07/14/2017	TDR: 000001034367
MODEL NO. 617426-001			REF:
BY: USJEDIL	Material:		C

BALDOR

G445T/444T FCXP F1 FOOT/CAST IRON CONDUIT BOX/DIV.1

617426-001

DUTY MASTER ALTERNATING CURRENT MOTORS

617426-001

SQUIRREL-CAGE INDUCTION

ENCLOSURE: UL LISTED MOTOR

MOUNTING: FOOT, F-1

G445T/G444T FRAME MOUNTING HOLES

COOLING: FAN COOLED

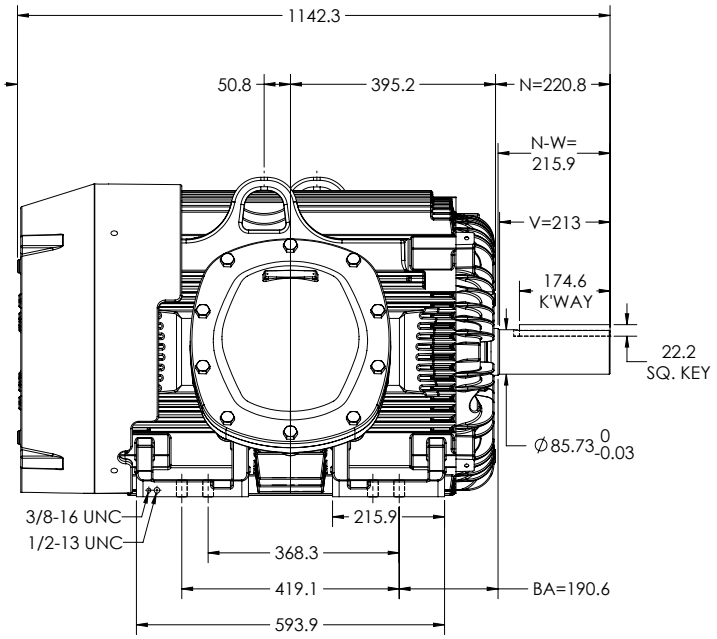

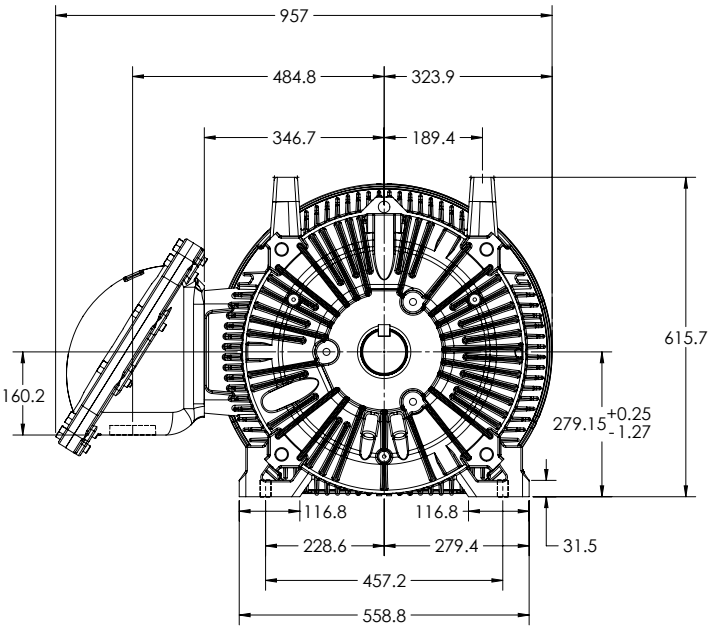

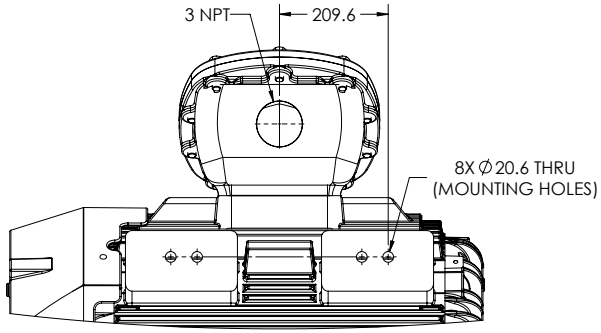

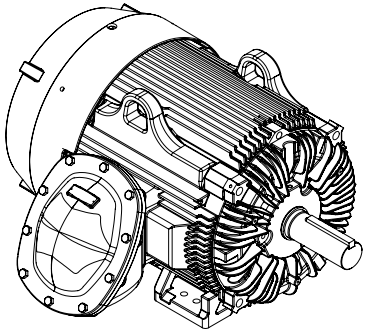

DIMENSIONS ARE IN MILLIMETERS.
WEIGHT (KGS): 975, MOTOR WEIGHTS MAY VARY BY 15% DEPENDING ON RATING.
CUSTOMER IS RESPONSIBLE FOR DETERMINING THAT MOTOR PERFORMANCE IS SUITABLE IN THE APPLICATION.

1 OBSTRUCTION MUST NOT ENCROACH ON AIR INLET.

IF MOUNTING CLEARANCE DETAILS ARE REQUIRED, CONSULT FACTORY.
MAX PERMISSIBLE SHAFT RUNOUT WHEN MEASURED AT END OF STANDARD SHAFT EXTENSION IS .08 T.I.R.

SHEET NUMBER 2 OF 2

617426-001

REV. DESC: UPDATE DS QUALITY			
REV: D	VERSION: 04	REVISED: 10:29:12 07/14/2017	TDR: 000001034367
MODEL NO. 617426-001			REF:
BY: USJEDIL	Material:		C

BALDOR

G445T/444T FCXP F1 FOOT/CAST IRON CONDUIT BOX/DIV.1

617426-001

416820–036

A–C MOTOR
CONNECTION DIAGRAM
STANDARD 3 LEAD CONNECTED

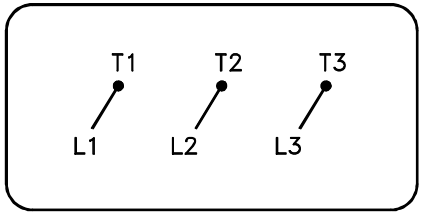

(N.P. 1575–BA)

416820–036

REV. DESC: LOADED TO BUS, C/R 335225			BALDOR
REV. LTR: –	VERSION: 00	TDR: 000000538207	
FILE: \MGA\00000\682		REVISED: 11:54:06 04/30/2010	CONN DIAG – STANDARD 3 LEAD
MTL: –		BY: RAGRA	SH 1 of 1

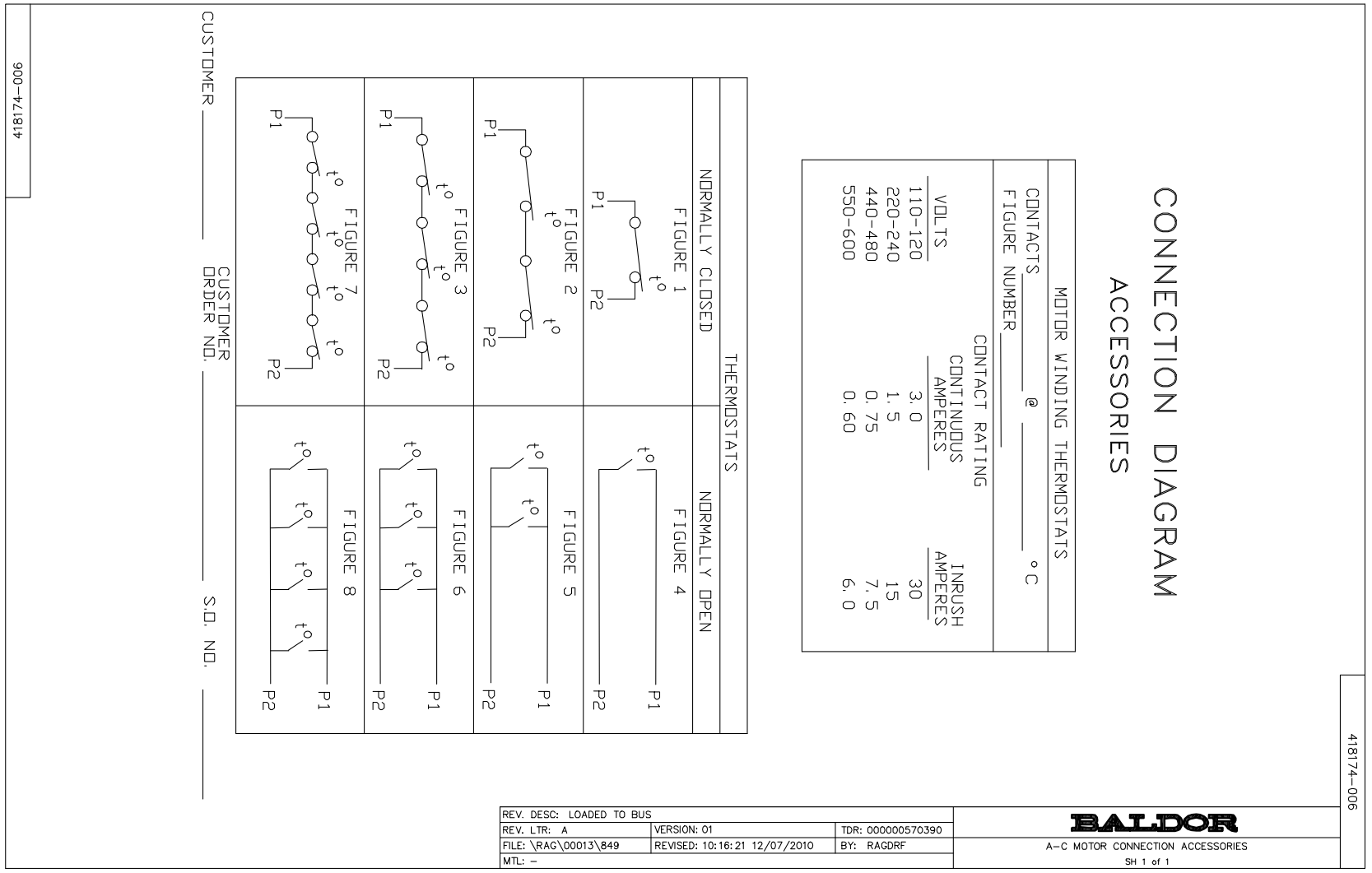
CONNECTION DIAGRAM
ACCESSORIES
418174-006
MOTOR WINDING THERMOSTATS
CONTACTS _____ @ _____ °C
FIGURE NUMBER _____
CONTACT RATING
VOLTS
CONTINUOUS AMPERES
INRUSH AMPERES
110-120 3.0 30
220-240 1.5 15
440-480 0.75 7.5
550-600 0.60 6.0
THERMOSTATS
NORMALLY CLOSED
NORMALLY OPEN
FIGURE 1
FIGURE 2
FIGURE 3
FIGURE 4
FIGURE 5
FIGURE 6
FIGURE 7
FIGURE 8
P1
P2
CUSTOMER _____ CUSTOMER ORDER NO. _____ S.O. NO. _____
418174-006
REV. DESC: LOADED TO BUS
REV. LTR: A
VERSION: 01
TDR: 000000570390
FILE: \RAG\00013\849
REVISED: 10:16:21 12/07/2010
BY: RAGDRF
MTL: -
BALDOR
A-C MOTOR CONNECTION ACCESSORIES
SH 1 of 1