09LY-000-552

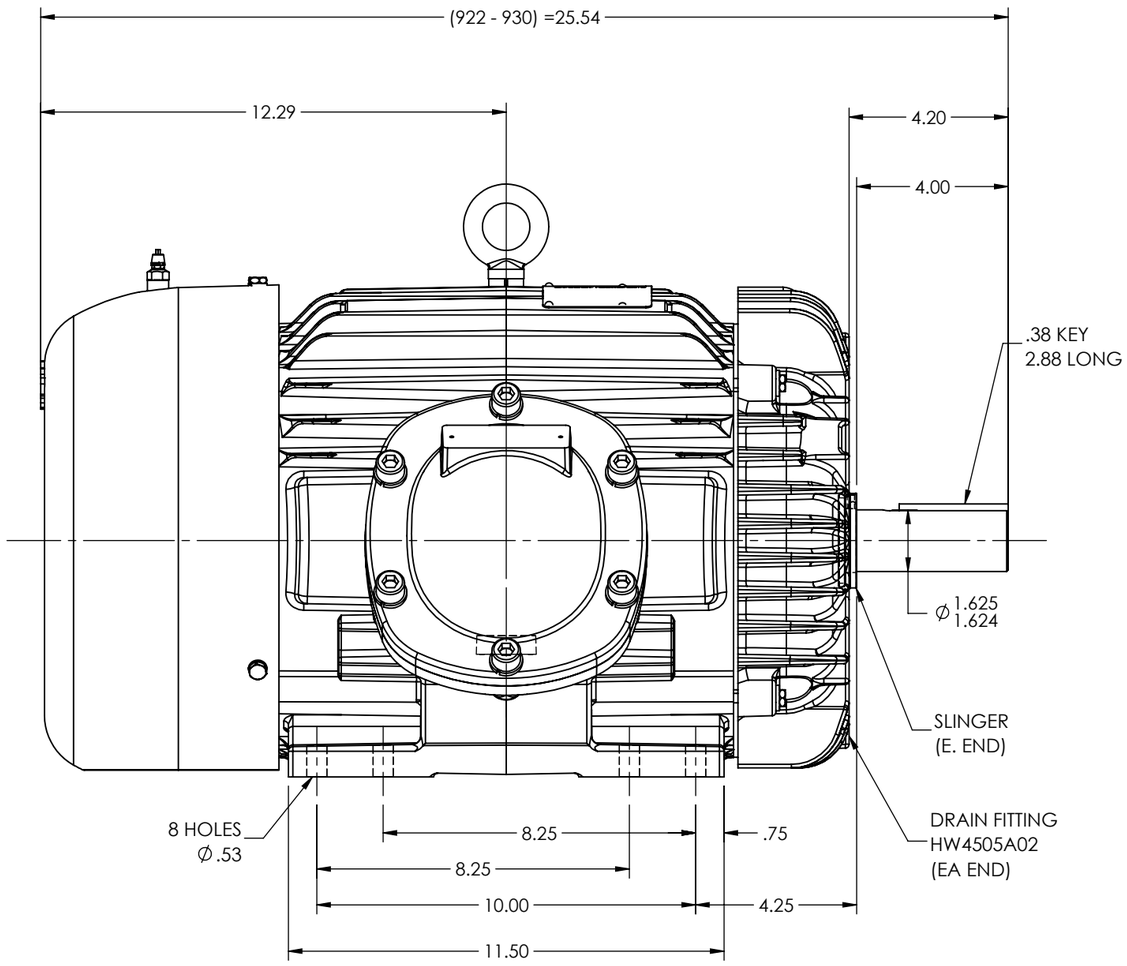

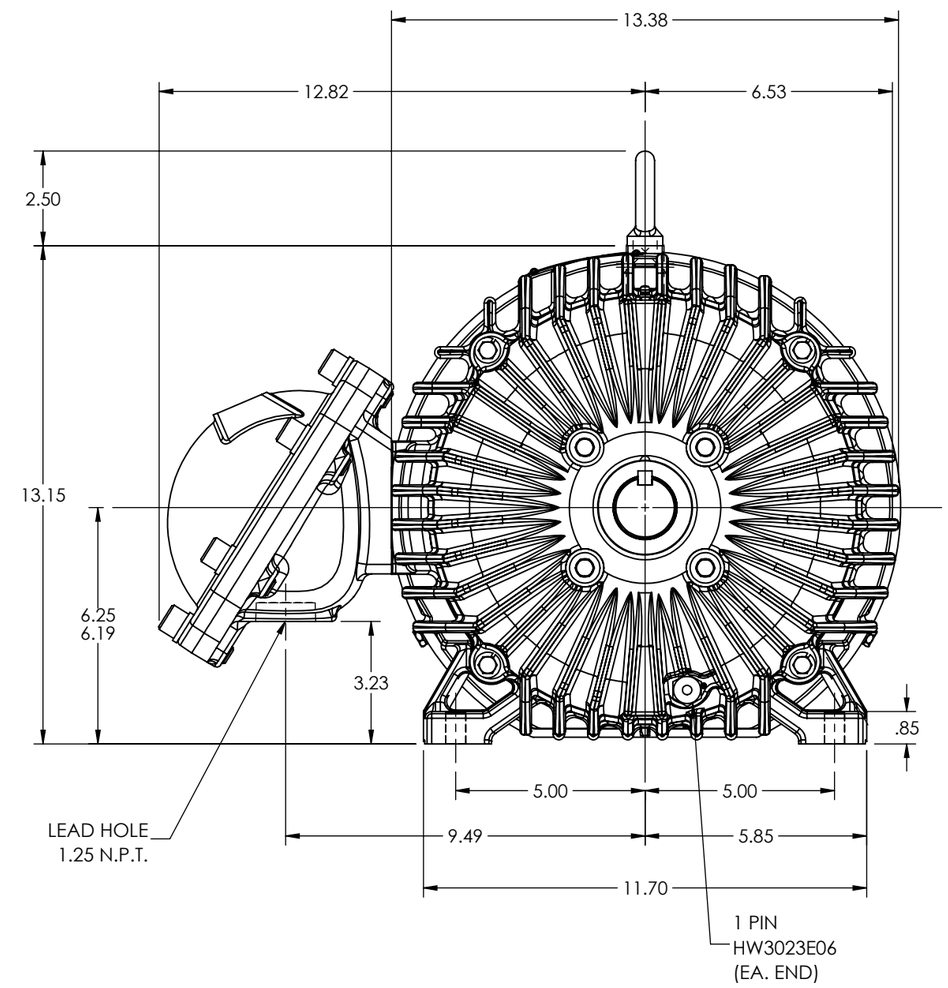

09LY-000-552

CUSTOMER IS RESPONSIBLE FOR DETERMINING THAT THE PRODUCT WILL PERFORM SUITABLY IN THE INTENDED APPLICATION

REV. DESC: CONVERT AUTOCAD DRAWING TO SWD			
REV: B	VERSION: 02	REVISED: 02:14:00 05/16/2023	TDR: 000001208005
MODEL NO. 09LY-000-552			REF: -
BY: ENALEM0			B

BALDOR - RELIANCE®

HOR XPFC 254-6T CL.I GP.C, DRILL RIG, SLINGERS, GRSRS