885-2

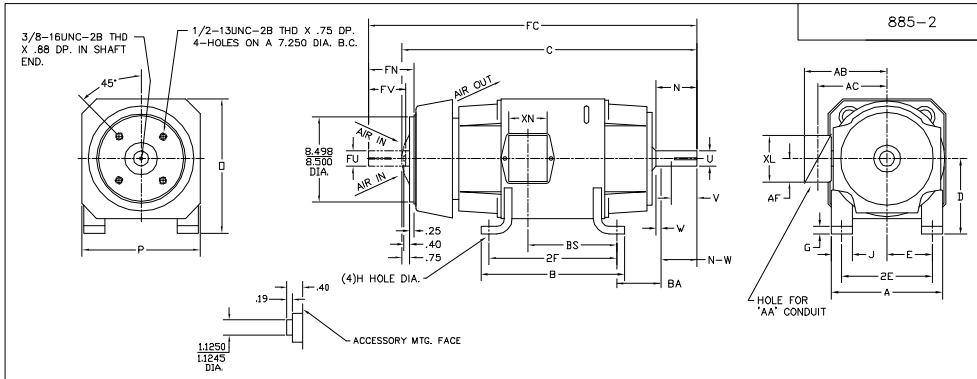

FRAME	FOOT MOUNTING BA	E	2F	C	H	J	D.E SHAFT EXTENSION N	N-W	U	V	W	DRIVE KEY KEY-SQ.	KEY-LONG	ACC SHAFT FN	FU	FV	ACC KEY KEY-SQ	KEY-LONG	FRAME A	B	C	FC	D	O	P
218AT	3.50	4.25	10.00	.50	.406	2.00	3.00	2.75	1.375	2.50 [3]	.25	.312	1.75	2.44	1.125	2.19	.250	2.25	10.38	11.00	26.30	28.75	5.25 [2]	10.47	10.44
219AT	3.50	4.25	11.00	.50	.406	2.00	3.00	2.75	1.375	2.50 [3]	.25	.312	1.75	2.44	1.125	2.19	.250	2.25	10.38	12.00	27.30	29.75	5.25 [2]	10.47	10.44
2110AT	3.50	4.25	12.50	.50	.406	2.00	3.00	2.75	1.375	2.50 [3]	.25	.312	1.75	2.44	1.125	2.19	.250	2.25	10.38	13.50	28.80	31.25	5.25 [2]	10.47	10.44
258AT	4.25	5.00	12.50	.69	.531	2.25	3.44	3.25	1.625	3.00 [3]	.19	.375	2.31	3.33	1.375	3.08	.312	3.00	12.38	14.00	30.19	35.03	6.25 [2]	12.47	12.44
259AT	4.25	5.00	14.00	.69	.531	2.25	3.44	3.25	1.625	3.00 [3]	.19	.375	2.31	3.33	1.375	3.08	.312	3.00	12.38	15.50	31.69	36.53	6.25 [2]	12.47	12.44
2510AT	4.25	5.00	16.00	.69	.531	2.25	3.44	3.25	1.625	3.00 [3]	.19	.375	2.31	3.33	1.375	3.08	.312	3.00	12.38	17.56	33.70	36.28	6.25 [2]	12.47	12.44
2513AT	4.25	5.00	22.00	.69	.531	2.25	3.44	3.25	1.625	3.00 [3]	.19	.375	2.31	3.33	1.375	3.08	.312	3.00	12.38	23.50	39.70	41.39	6.25 [2]	12.47	12.44

FRAME	CONDUIT BOX AA	AB	AC	AF	BS	XL	XN	ARM APPROX. WK² LBS.FT.²	APPROXIMATE WEIGHT
218AT	3/4-1	7.91	6.44	2.44	8.38	3.81	3.12	1.35	277 [5]
219AT	3/4-1	7.91	6.44	2.44	9.38	3.81	3.12	1.49	295 [5]
2110AT	3/4-1	7.91	6.44	2.44	10.88	3.81	3.12	1.71	321 [5]
258AT	1 1/4	9.35	7.72	2.94	9.75	4.94	4.00	2.91	411 [5]
259AT	1 1/4	9.35	7.72	2.94	11.25	4.94	4.00	3.31	456 [5]
2510AT	1 1/4	9.35	7.72	2.94	13.25	4.94	4.00	3.80	516 [5]
2513AT	1 1/4	9.35	7.72	2.94	19.25	4.94	4.00	5.27	528 [5]

1) SHAFT DIAMETERS TO 1.500 TOLERANCE +.0000 -.0005
SHAFT DIAMETERS ABOVE 1.500 TOLERANCE +.0000 -.0010
SHAFT DIAMETERS TO 1.625 RUNOUT .002 T.I.R. MAX.
SHAFT DIAMETERS ABOVE 1.625 RUNOUT .003 T.I.R. MAX.
2) 'D' DIMENSION TOLERANCE +.000 - .060
3) 'V' DIMENSION IS MAX HUB LENGTH ON SHAFT
4) CONDUIT BOX CAN BE ROTATED IN 90° STEPS ON ITS OWN AXIS
5) TOTAL WEIGHT OF MOTOR AND FAN COOLED PACKAGE.
6) ALL DIMENSIONS NOT NOTED ARE NOMINAL DIMENSIONS CONSULT FACTORY FOR TOLERANCES.

FOR F1 OR F2 CONDUIT BOX LOCATION SEE SALES ORDER

CUSTOMER IS RESPONSIBLE FOR DETERMINING THAT BALDOR'S PRODUCT WILL PERFORM SUITABLY IN THE INTENDED APPLICATION.

REV. DESC: REV. "D" DIM TO +.000 -.060			BALDOR
REV. LTR: A	VERSION: 01	TDR: 000000752566	
FILE: \RGG\00019\542		REVISED: 04:41:28 06/20/2012	DIM SHEET
MTL: -		BY: RGGNAS	SH 1 of 1

885-2