ABB BALDOR RELIANCE

Customer information packet

D51500R-BV

500HP, 1150RPM, DC, 4414ATZ, DPG-FV,

Copyright © All product information within this document is subject to ABB Motors and Mechanical Inc. copyright © protection, unless otherwise noted.
11/28/2026 7:09:21 AM

Specifications

Enclosure	DP
Frame	C4414ATZ
Frame Material	Steel
Output Power	500.000 HP
Agency Approvals	CCSA US
Ambient Temperature	40 °C
Bearing Grease Type	Polyrex EM (-20F +300F)
Drip Cover	No Drip Cover
Feedback Device	NO FEEDBACK
Field Winding Type	STR. SHUNT
Frame Prefix	C
Heater Indicator	No Heater
Lifting Lugs	Standard Lifting Lugs
Motor Standards	NEMA
Mounting Arrangement	F2
Overall Length	68.56 IN
Shaft Extension Location	Pulley End
Shaft Ground Indicator	No Shaft Grounding
Shaft Slinger Indicator	No Slinger

Part Detail

Revision	A
Type	DC
Mech. spec.	
Base	
Status	PRD/A
Elec. spec.	G9041A D
Layout	616492-001
Eff. date	05-18-2022
CD Diagram	406770-006
Poles	00
Leads	
Proprietary	False
Created date	04-09-2015

Nameplate

000613006HP									
CAT.NO.	D51500R-BV	**SPEC NO.**	T44T1306						
FR	C 4414ATZ	**HP**	500	**DUTY**	CONT				
ENCL.	DP	**RPM**	1150/1450	**S.F.**	1.0				
ENCL MOD	FORCE VENT	**VOLTS**	500	**INSUL**	F				
MAX SAFE SPEED	02450	**AMPS**	805.00	**AMB.**	40				
	FIELD DATA	**SER.NO.**							
WINDING	STR. SHUNT	**POWER CODE**	C						
VOLTS	300	**D.E. BRG.**	110BC02J30X						
MAX AMPS @ 25 C	14.75	**O.D.E. BRG.**	95BC02J30X						
HOT AMPS	10.40/6.62	**MIN. AMB.**	0	**TYPE**	TR				
	BRUSH:419904052BK								

616492-001

DIRECT CURRENT MOTORS AND GENERATORS
INDUSTRIAL-RPM III

ENCLOSURE: DRIP PROOF FULLY GUARDED
SPLASHPROOF

MOUNTING: FOOT

COOLING: FORCE VENTILATED WITH
INTEGRAL BLOWER & MOTOR

ACCESSORIES: FLANGE MOUNTED
TACHOMETER

SIGNAL DEVICE	XL	WT. (LBS.)
5PY	10.88	7
BC-42	13.38	25
BC-46	15.68	35
M-627A	10.50	14
M-628A	10.50	14
M-727A	10.50	14
M-737A	10.50	14
RD-11	10.00	17
RD-51	16.68	38
RD-61	10.00	17
H56	10.00	17
RE-045	2.56	5
RE-210	15.31	17
TG2168A	2.56	5
TS2014N	6.50	5
TS2087N	11.00	17
RD-120	1.88	5
ST67/RL67	2.00	5
HS35	3.00	5
M285	3.12	20
RPY444	11.00	15
M3 OR M4	3.62	10
AV56	2.00	5

FRAME C4412ATZ - C4414ATZ

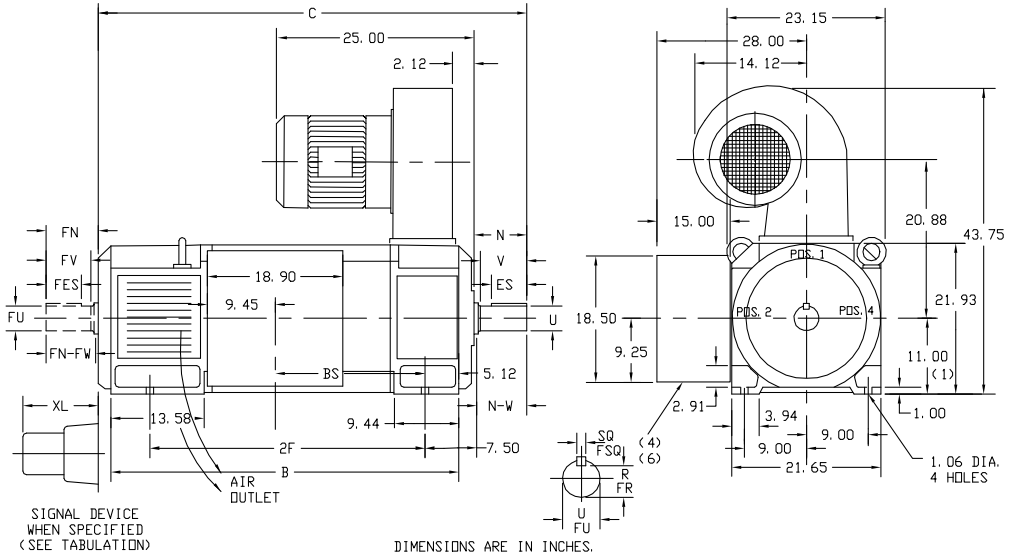

DIMENSIONS ARE IN INCHES.

FRAME	DUTY	C	BS	B	2F	DRIVE END SHAFT AND KEY							(5) OPPOSITE DRIVE END SHAFT AND KEY							WT.
						N	N-W	U(2)	V	R(3)	SQ	ES	FN	FN-FW	FU(2)	FV	FR(3)	FSQ	FES	(LBS)
C4412ATZ	COUPLED	58.32	19.81	46.56	36.00	7.62	7.25	3.625	7.00	3.134	.875	5.75	7.62	7.25	3.625	7.00	3.134	.875	5.75	3245
UC4412ATZ	BELTED	59.32	19.81	46.56	36.00	8.62	8.25	4.125	8.00	3.563	1.000	6.50	7.62	7.25	3.625	7.00	3.134	.875	5.75	3275
C4413ATZ	COUPLED	62.25	23.75	50.56	40.00	7.62	7.25	3.625	7.00	3.134	.875	5.75	7.62	7.25	3.625	7.00	3.134	.875	5.75	3660
UC4413ATZ	BELTED	63.25	23.75	50.56	40.00	8.62	8.25	4.125	8.00	3.563	1.000	6.50	7.62	7.25	3.625	7.00	3.134	.875	5.75	3690
C4414ATZ	COUPLED	68.56	30.05	56.56	45.00	7.62	7.25	3.625	7.00	3.134	.875	5.75	7.62	7.25	3.625	7.00	3.134	.875	5.75	4280
UC4414ATZ	BELTED	69.56	30.05	56.56	45.00	8.62	8.25	4.125	8.00	3.563	1.000	6.50	7.62	7.25	3.625	7.00	3.134	.875	5.75	4310

(1) THIS DIMENSION WILL NOT BE EXCEEDED. SHIMS UP TO .06 INCH IN THICKNESS ARE USUALLY REQUIRED FOR COUPLED OR GEARED MACHINES.
(2) 'U' AND 'FU' VARY +.000 -.001.
(3) 'R' AND 'FR' VARY +.000 -.015.
(4) REMOVEABLE COVER PLATE FOR CUSTOMER DRILLING. TERMINAL BOX CAN BE POSITIONED FOR EITHER TOP OR BOTTOM CONDUIT ENTERY.
(5) OPPOSITE DRIVE END SHAFT SUPPLIED ONLY WHEN SPECIFIED.
(6) TERMINAL BOX LOCATED ON OPPOSITE SIDE WHEN F-2, W-1, W-4, W-5, W-7 OR C-1 MOUNTING IS SPECIFIED.
(7) AIR FILTER SUPPLIED ONLY WHEN SPECIFIED. BLOWER ASSEMBLY CAN BE LOCATED AT POSITIONS 1, 2 OR 4.

CUSTOMER IS RESPONSIBLE FOR DETERMINING THAT BALDOR'S PRODUCT WILL PERFORM SUITABLY IN THE INTENDED APPLICATION.

REV. DESC: ADD AV56 TO DS		
REV. LTR: B	VERSION: 02	TDR: 000000865577
FILE: \RGG\00016\134	REVISED: 02:50:00 08/04/2014	BY: RGGWT
MTL: -		

BALDOR

DIMENSION DRAWING,C4412ATZ - C4414ATZ,DPP,FOOT MTG,FRC VENT.
SH 1 of 1

616492-001

406770-006

406770-006

CONNECTION DIAGRAM

D-C MOTOR - STRAIGHT SHUNT

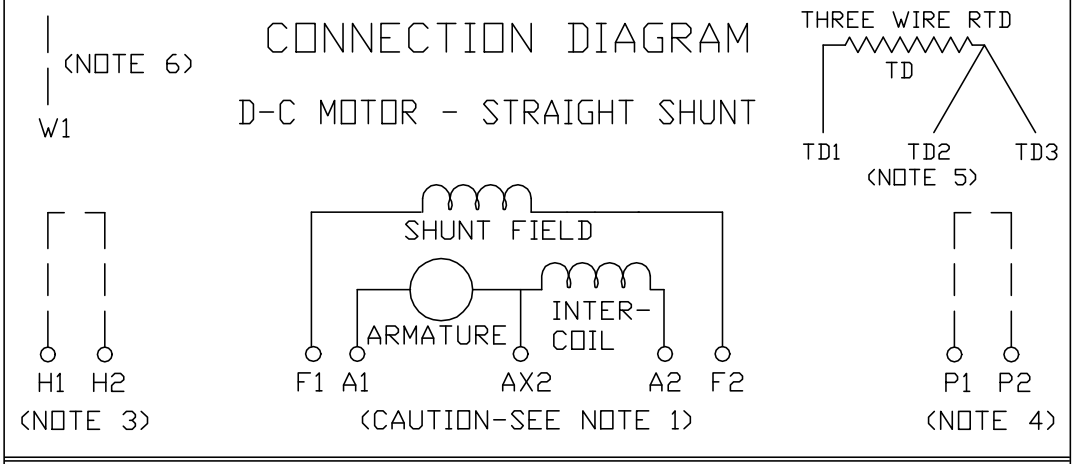

ARMATURE AND FIELD EXTERNAL CONNECTIONS
WARNING- SEE NOTE 7 FOR GROUNDING INSTRUCTIONS



ROTATION FACING COMMUTATOR END

1. CAUTION — ARMATURE MAY HAVE MULTIPLE LEADS. CONNECT ALL LUGS WITH THE SAME MARKING TOGETHER.
2. OPTIONAL CONTROL SIGNAL LEAD IS MARKED AX2. ALWAYS TAKE INTERPOLE DROP BETWEEN A2 AND AX2. NOTE: NEMA DESIGNATION FOR AX2 IS LETTER C.
3. SPACE HEATERS, WHEN PROVIDED, WILL HAVE LEADS MARKED H1 AND H2, H3, H4, ETC.
4. THERMAL PROTECTOR, WHEN PROVIDED, WILL HAVE LEADS MARKED P1 AND P2, P3, P4, ETC.
5. WINDING RTD'S, WHEN PROVIDED, WILL HAVE LEADS MARKED TD1, TD2, &TD3.
6. BRUSH WEAR SENSOR, WHEN PROVIDED, WILL HAVE LEAD MARKED W1.
7. WARNING — MOTOR MUST BE GROUNDED TO PREVENT SERIOUS INJURIES TO PERSONNEL. GROUND THE MOTOR PER IEC, NATIONAL ELECTRICAL CODE AND ANY APPLICABLE LOCAL ELECTRICAL CODES. A TAPPED HOLE IS PROVIDED IN THE CONDUIT BOX, ON THE FOOT, FRAME BRACE OR OPPOSITE OPPOSITE DRIVE END BRACKET, ADJACENT TO THE TERMINAL BOX FOR FOR MOTOR GROUNDING. GROUND LEAD, WHEN PROVIDED, WILL BE GREEN.

CUSTOMER _____ CUSTOMER ORDER NO. _____ RELIANCE S.O. NO. _____

BALDOR

D-C MOTOR CONNECTION DIAGRAM, STRAIGHT SHUNT

SH 1 of 1

REV. DESC: UPDATE LOGO AND TITLEBLOCK; LOADED TO BUS
REV. LTR: - | VERSION: 00 | TDR: 000000781086
FILE: \RSN\00026\515 | REVISED: 02:41:08 02/01/2013
MTL: - | BY: MGHPC