ABB BALDOR RELIANCE

# Customer information packet

## D5050R-BV

50HP, 1750RPM, DC, 2115ATZ, DPG-FV,

Copyright © All product information within this document is subject to ABB Motors and Mechanical Inc. copyright © protection, unless otherwise noted.
11/29/2026 5:22:46 AM

## Specifications

| | |
|---|---|
| **Enclosure** | DP |
| **Frame** | LC2115ATZ |
| **Frame Material** | Steel |
| **Output Power** | 50.000 HP |
| **Agency Approvals** | CCSA US |
| **Ambient Temperature** | 40 °C |
| **Bearing Grease Type** | Polyrex EM (-20F +300F) |
| **Drip Cover** | No Drip Cover |
| **Feedback Device** | NO FEEDBACK |
| **Field Winding Type** | STR. SHUNT |
| **Frame Prefix** | LC |
| **Heater Indicator** | No Heater |
| **Lifting Lugs** | Standard Lifting Lugs |
| **Motor Standards** | NEMA |
| **Mounting Arrangement** | F1 |
| **Overall Length** | 35.25 IN |
| **Shaft Extension Location** | Pulley End |
| **Shaft Ground Indicator** | No Shaft Grounding |
| **Shaft Slinger Indicator** | No Slinger |

## Part Detail

| | |
|---|---|
| **Revision** | B |
| **Type** | DC |
| **Mech. spec.** | |
| **Base** | |
| **Status** | PRD/A |
| **Elec. spec.** | G8475A B |
| **Layout** | 616002-001 |
| **Eff. date** | 10-09-2025 |
| **CD Diagram** | 406770-006 |
| **Poles** | 00 |
| **Leads** | |
| **Proprietary** | False |
| **Created date** | 04-09-2015 |

**Nameplate**

| 000613006HP | | | | | | | | | |
|---|---|---|---|---|---|---|---|---|---|
| **CAT.NO.** | D5050R-BV | | **SPEC NO.** | T21T2354 | | | | | |
| **FR** | LC 2115ATZ | **HP** | 50 | | **DUTY** | CONT | | | |
| **ENCL.** | DP | **RPM** | 1750/2100 | | **S.F.** | 1.0 | | | |
| **ENCL MOD** | FORCE VENT | **VOLTS** | 500 | | **INSUL** | F | | | |
| **MAX SAFE SPEED** | 04500 | **AMPS** | 87.00 | | **AMB.** | 40 | | | |
| | **FIELD DATA** | **SER.NO.** | | | | | | | |
| **WINDING** | STR. SHUNT | **POWER CODE** | C | | | | | | |
| **VOLTS** | 300 | **D.E. BRG.** | 50BC03J30X | | | | | | |
| **MAX AMPS @ 25 C** | 3.95 | **O.D.E. BRG.** | 45BC02J30X | | | | | | |
| **HOT AMPS** | 2.85/2.36 | **MIN. AMB.** | 0 | | **TYPE** | TR | | | |
| | BRUSH:419904051AC | | | | | | | | |

616002-001

# INDUSTRIAL DIRECT CURRENT MOTORS AND GENERATORS – RPM III

ENCLOSURE: DRIP-PROOF FULLY-GUARDED, SPLASHPROOF

COOLING: FORCE VENTILATED WITH INTEGRAL BLOWER AND MOTOR

MOUNTING:FOOT

METHOD OF DRIVE:COUPLED OR BELTED

ACCESSORIES: PROVISION FOR TACHOMETER MOUNTING ONLY WHEN SPECIFIED

## FRAMES SC2113ATZ THRU LC2115ATZ

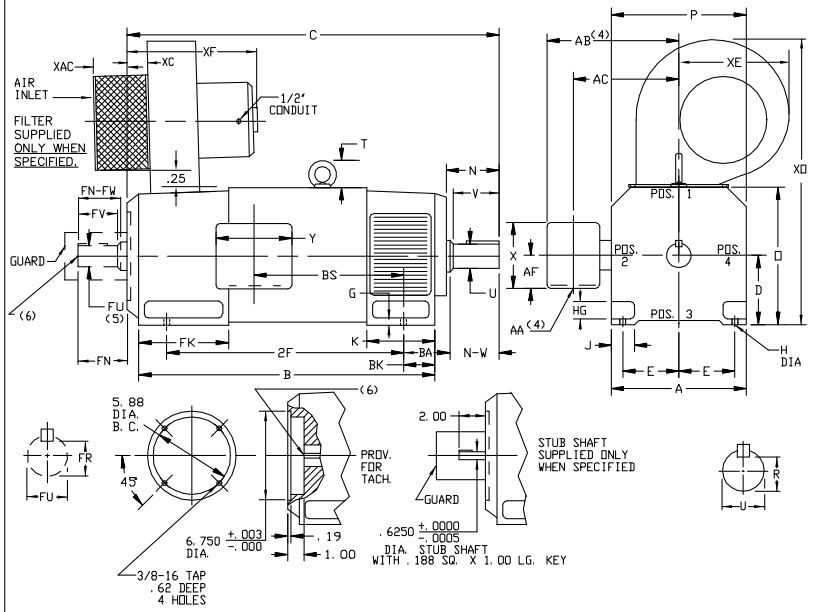


DIMENSIONS ARE IN INCHES

| FRAME | XAC | XC | XE | XF | XO |
|---|---|---|---|---|---|
| SC2113ATZ–LC2115ATZ | 7.75 | 2.25 | 10.00 | 16.00 | 22.75 |

| FRAME | A | D(1) | E | G | H | HG | J | O | P | T | BA | K | FK | BK |
|---|---|---|---|---|---|---|---|---|---|---|---|---|---|---|
| SC2113ATZ–LC2115ATZ | 10.25 | 5.25 | 4.25 | .44 | .44 | 1.38 | 1.75 | 10.44 | 10.31 | 2.08 | 3.50 | 5.19 | 6.81 | 2.38 |

| | | | | | DRIVE END SHAFT AND KEY | | | | | | | OPPOSITE DRIVE END SHAFT AND KEY(5) | | | | | | | WT. |
|---|---|---|---|---|---|---|---|---|---|---|---|---|---|---|---|---|---|---|---|
| FRAME | C(7) | B | BS | 2F | N | N–W | U(2) | V | R(3) | SQ. | LGTH. | FN | FN–FW | FU(2) | FV | FR(3) | SQ. | LGTH. | LBS. |
| SC2113ATZ | 28.38 | 22.50 | 11.38 | 18.00 | 4.00 | 3.75 | 1.875 | 3.50 | 1.591 | .500 | 2.50 | 3.50 | 3.25 | 1.625 | 3.00 | 1.416 | .375 | 2.25 | 345 |
| MC2113ATZ | 29.62 | 23.75 | 12.62 | 18.00 | 4.00 | 3.75 | 1.875 | 3.50 | 1.591 | .500 | 2.50 | 3.50 | 3.25 | 1.625 | 3.00 | 1.416 | .375 | 2.25 | 370 |
| LC2113ATZ | 31.25 | 25.38 | 14.25 | 18.00 | 4.00 | 3.75 | 1.875 | 3.50 | 1.591 | .500 | 2.50 | 3.50 | 3.25 | 1.625 | 3.00 | 1.416 | .375 | 2.25 | 400 |
| MC2115ATZ | 32.50 | 26.62 | 15.50 | 22.00 | 4.00 | 3.75 | 1.875 | 3.50 | 1.591 | .500 | 2.50 | 3.50 | 3.25 | 1.625 | 3.00 | 1.416 | .375 | 2.25 | 425 |
| LC2115ATZ | 35.25 | 29.38 | 18.25 | 22.00 | 4.00 | 3.75 | 1.875 | 3.50 | 1.591 | .500 | 2.50 | 3.50 | 3.25 | 1.625 | 3.00 | 1.416 | .375 | 2.25 | 480 |

(1) 'D' DIMENSION WILL NOT BE EXCEEDED. SHIMS UP TO .03 INCHES IN THICKNESS ARE USUALLY REQUIRED FOR COUPLED OR GEARED MACHINES.
(2) 'U' AND 'FU' VARY----+.000 -.001
(3) 'R' AND 'FR' VARY----+.000 -.015
(4) TERMINAL BOX VARIES WITH H.P. FOR DIMENSIONS 'AA', 'AB', 'AC', 'AF', 'X' AND 'Y', REFER TO BOX D/S. (STD. 609959-1, 'X/P' 609959-2, MILL 609959-3)
(5) OPPOSITE DRIVE END SHAFT SUPPLIED ONLY WHEN SPECIFIED.
(6) MOTOR SHAFT TAPPED FOR SCREW-IN STUB SHAFT.
(7) WHEN THE MOTOR APPLICATION DOES NOT REQUIRE THE USE OF DPP. DRIVE END, ADD .25 TO 'C' DIM. FOR BRACKET COVER. TERMINAL BOX CAN BE ROTATED FOR LEAD OUTLET AT TOP, SIDES OR BOTTOM. TERMINAL BOX LOCATED ON OPPOSITE SIDE WHEN F-2, W-1, W-4, W-5, W-7, OR C-1 MOUNTING IS SPECIFIED. BOX LOCATED ON TOP WHEN SPECIFIED. BLOWER ASSEMBLY CAN BE LOCATED AT POSITIONS 1, 2, OR 4, EXCEPT BLOWER ASSEMBLY AND TERMINAL BOX CAN NOT BE LOCATED AT THE SAME POSITION. MOTOR WEIGHT MAY VARY 15% FOR NON-STANDARD RATINGS AND/OR ACCESSORIES. IF MOUNTING CLEARANCE DETAILS ARE REQUIRED, CONSULT FACTORY.

CUSTOMER IS RESPONSIBLE FOR DETERMINING THAT BALDOR'S PRODUCT WILL PERFORM SUITABLY IN THE INTENDED APPLICATION.

| | | |
|---|---|---|
| REV. DESC: LOADED TO BUS | | |
| REV. LTR: – | VERSION: 00 | TDR: 000000578087 |
| FILE: \RGG\00015\944 | REVISED: 08:22:49 01/28/2011 | BY: CONNAS |
| MTL: – | | |

BALDOR

DIMENSION DRAWING,SC2113ATZ – LC2115ATZ,DPP,FOOT MTG

SH 1 of 1

616002-001

609959-001

# INDUSTRIAL DIRECT CURRENT MOTORS AND GENERATORS – RPM III

## TERMINAL BOX DIMENSIONS

## STANDARD SIZE AND ONE SIZE LARGER

## FRAMES C2113ATZ THRU C2815ATZ




DIMENSIONS ARE IN INCHES

STEEL TERMINAL BOX DIMENSIONS

| FRAME SIZE | MAX. AMPS | STANDARD SIZE AA(1) | AB | AC | AF | X | Y | PART NUMBER | ONE SIZE LARGER AA(1) | AB | AC | AF | X | Y | PART NUMBER |
|---|---|---|---|---|---|---|---|---|---|---|---|---|---|---|---|
| C2113ATZ C2115ATZ (2) | 40 | 3/4 & 1" | 8.97 | 7.47 | 1.94 | 4.38 | 5.00 | 705028-1-R | 1-1/4 & 1-1/2 | 10.03 | 8.03 | 2.50 | 5.50 | 6.12 | 705029-1-R |
| | 96 | 1-1/4 & 1-1/2 | 10.03 | 8.03 | 2.50 | 5.50 | 6.12 | 705029-1-R | 2" & 2-1/2 | 11.16 | 8.41 | 3.19 | 7.00 | 7.62 | 705030-1-R |
| | 208 | 2" & 2-1/2 | 11.16 | 8.41 | 3.19 | 7.00 | 7.62 | 705030-1-R | 2" & 2-1/2 | 11.16 | 8.41 | 3.19 | 7.00 | 7.62 | 705030-1-R |
| C2512ATZ C2514ATZ C2515ATZ (2) | 40 | 3/4 & 1" | 10.03 | 8.53 | 1.94 | 4.38 | 5.00 | 705028-1-R | 1-1/4 & 1-1/2 | 11.09 | 9.09 | 2.50 | 5.50 | 6.12 | 705029-1-R |
| | 96 | 1-1/4 & 1-1/2 | 11.09 | 9.09 | 2.50 | 5.50 | 6.12 | 705029-1-R | 2" & 2-1/2 | 12.22 | 9.47 | 3.19 | 7.00 | 7.62 | 705030-1-R |
| | 208 | 2" & 2-1/2 | 12.22 | 9.47 | 3.19 | 7.00 | 7.62 | 705030-1-R | 2" & 2-1/2 | 12.22 | 9.47 | 3.19 | 7.00 | 7.62 | 705030-1-R |
| C2812ATZ C2813ATZ C2815ATZ | 128 | 2" | 14.03 | 10.53 | 4.25 | 8.44 | 7.25 | 74874-R | 2" & 2-1/2 | 12.22 | 9.47 | 3.19 | 7.00 | 7.62 | 705030-1-R |
| | 185 | 3" | 14.47 | 11.22 | 4.25 | 8.44 | 7.25 | 74874-R | 3" | 14.47 | 11.22 | 4.25 | 8.44 | 7.25 | 74874-R |
| | 269 | 4" | 15.91 | 11.84 | 5.38 | 8.44 | 7.25 | 74874-24-R | 4" | 15.91 | 11.84 | 5.38 | 10.56 | 9.00 | 700308-3-R |
| | | | 15.91 | 11.84 | 5.38 | 10.56 | 9.00 | 700308-3-R | 5" (4) | 18.72 | 13.47 | 7.00 | 12.75 | 15.00 | 702658-1-C |

CAST IRON TERMINAL BOX DIMENSIONS

| FRAME SIZE | MAX. AMPS | STANDARD SIZE AA(3) | AB | AC | AF | X | Y | PART NUMBER | ONE SIZE LARGER AA(3) | AB | AC | AF | X | Y | PART NUMBER |
|---|---|---|---|---|---|---|---|---|---|---|---|---|---|---|---|
| C2113ATZ C2115ATZ | 18 | 3/4 | 10.03 | 8.03 | 2.50 | 5.00 | 5.75 | 705028-2-S | 1" | 10.03 | 8.03 | 2.50 | 5.00 | 5.75 | 705028-2-T |
| | 40 | 1" | 10.03 | 8.03 | 2.50 | 5.00 | 5.75 | 705028-2-T | 1-1/2 | 10.97 | 8.53 | 3.00 | 6.00 | 7.00 | 705029-2-R |
| | 96 | 1-1/2 | 10.97 | 8.53 | 3.00 | 6.00 | 7.00 | 705029-2-R | 2" | 10.97 | 8.53 | 3.00 | 6.00 | 7.00 | 705029-2-S |
| | 208 | 2" | 10.97 | 8.53 | 3.00 | 6.00 | 7.00 | 705029-2-S | 2-1/2 | 12.66 | 8.91 | 3.62 | 7.88 | 9.25 | 705030-2-R |
| C2512ATZ C2514ATZ C2515ATZ | 18 | 1" | 11.09 | 9.09 | 2.50 | 5.00 | 5.75 | 705028-2-S | 1" | 11.09 | 9.09 | 2.50 | 5.00 | 5.75 | 705028-2-T |
| | 40 | 1" | 11.09 | 9.09 | 2.50 | 5.00 | 5.75 | 705028-2-T | 1-1/2 | 12.03 | 9.59 | 3.00 | 6.00 | 7.00 | 705029-2-R |
| | 96 | 1-1/2 | 12.03 | 9.59 | 3.00 | 6.00 | 7.00 | 705029-2-R | 2" | 12.03 | 9.59 | 3.00 | 6.00 | 7.00 | 705029-2-S |
| | 208 | 2" | 12.03 | 9.59 | 3.00 | 6.00 | 7.00 | 705029-2-S | 2-1/2 | 13.72 | 9.97 | 3.62 | 7.88 | 9.25 | 705030-2-R |
| C2812ATZ C2813ATZ C2815ATZ | 128 | 2" | 12.78 | 10.34 | 3.00 | 6.00 | 7.00 | 75460-T | 3" | 14.47 | 10.72 | 3.62 | 7.88 | 9.25 | 76700-RB |
| | 185 | 3" | 14.47 | 10.72 | 3.62 | 7.88 | 9.25 | 76700-RB | 4" | 15.78 | 11.59 | 4.12 | 9.50 | 10.50 | 76708-RR |
| | 269 | 4" | 15.78 | 11.59 | 4.12 | 9.50 | 10.50 | 76708-RR | 5" (4) | 18.59 | 13.34 | 7.00 | 12.75 | 15.00 | 76870-S |

CONDUIT BOX DIMENSIONS WITH TERMINAL BOARDS (IEC TYPE BOX)

STANDARD SIZE

| FRAME SIZE | AMPS | AB | AC | AF | X | AA | Y | PART NUMBER | PART NUMBER |
|---|---|---|---|---|---|---|---|---|---|
| C210 | 100 | 10.71 | 8.98 | 2.72 | 7.48 | -- | 7.48 | 706310-56-A | 706310-225-R |
| | 200 | 11.26 | 9.25 | 3.35 | 8.82 | -- | 8.82 | 706310-56-B | 706310-226-R |
| C250 | 100 | 11.30 | 9.57 | 2.72 | 7.48 | -- | 7.48 | 706310-56-A | 706310-225-R |
| | 200 | 11.85 | 9.84 | 3.35 | 8.82 | -- | 8.82 | 706310-56-B | 706310-226-R |
| | 400 | 17.48 | 12.75 | 6.20 | 14.39 | -- | 14.39 | 706310-63-B & 706310-63G | 706310-63-B & 706310-63G |
| | 800 | 17.48 | 12.75 | 6.20 | 14.39 | -- | 14.39 | 706310-63-B & 706310-63G | 706310-63-B & 706310-63G |
| C280 | 200 | 12.60 | 10.59 | 3.76 | 8.82 | -- | 8.82 | 706310-56-B | 706310-226-R |
| | 400 | 18.27 | 13.54 | 6.20 | 14.39 | == | 14.39 | 706310-63-B & 706310-63G | 706310-63-B & 706310-63G |
| | 800 | 18.27 | 13.54 | 6.20 | 14.39 | -- | 14.39 | 706310-63-B & 706310-63G | 706310-63-B & 706310-63G |
| | 1600 | 18.27 | 13.54 | 7.68 | 15.35 | -- | 15.35 | 706310-63-C | 706310-63-C |

OPTIONAL AUXILIARY CONDUIT BOX DIMENSIONS (MAXIMUM)

| FRAME SIZE | XAB | XX | XY | PART NUMBER |
|---|---|---|---|---|
| C210 | 7.38 | 4.25 | 4.25 | 602007-26-A |
| C250 | 8.44 | 4.25 | 4.25 | 602007-26-A |
| C280 | 9.12 | 4.25 | 4.25 | 602007-26-A |

| FRAME SIZE | XAB | XX | XY | PART NUMBER |
|---|---|---|---|---|
| C210 | 10.88 | 8.00 | 8.00 | 706310-3-B |
| C250 | 11.88 | 8.00 | 8.00 | 706310-3-B |
| C280 | 12.62 | 8.00 | 8.00 | 706310-3-B |

(1) "AA" CONDUIT.
(2) STEEL TERMINAL BOX FOR C2113ATZ AND C2512ATZ FRAMES PROVIDED WITH DOUBLE KNOCKOUT.
(3) "AA" PIPE TAP.
(4) TERMINAL BOX 76870-S AND 76870-SR EXTENDS BELOW MOTOR FEET. TERMINAL BOX CAN BE ROTATED FOR LEAD OUTLET AT TOP, SIDES OR BOTTOM. TERMINAL BOX LOCATED ON OPPOSITE SIDE WHEN F-2, W-1, W-4, W-5, W-7, OR C-1 MOUNTING IS SPECIFIED. BOX LOCATED ON TOP WHEN SPECIFIED. FOR "X/P" TERMINAL BOX DIMENSIONS SEE 609959-2. FOR MILL TYPE TERMINAL BOX DIMENSIONS SEE 609959-3.

CUSTOMER IS RESPONSIBLE FOR DETERMINING THAT BALDOR'S PRODUCT WILL PERFORM SUITABLY IN THE INTENDED APPLICATION.

| | | |
|---|---|---|
| REV. DESC: ADD 706310-63G C/BOX TO C250 AND C280 FRAMES | | |
| REV. LTR: A | VERSION: 01 | TDR: 000000816512 |
| FILE: \RGG\00021\153 | | REVISED: 03:09:09 09/06/2013 |
| MTL: – | | BY: RGGWT |

BALDOR

DIMENSION SHEET

SH 1 of 1

609959-001

406770-006

406770-006

# CONNECTION DIAGRAM

## D-C MOTOR - STRAIGHT SHUNT

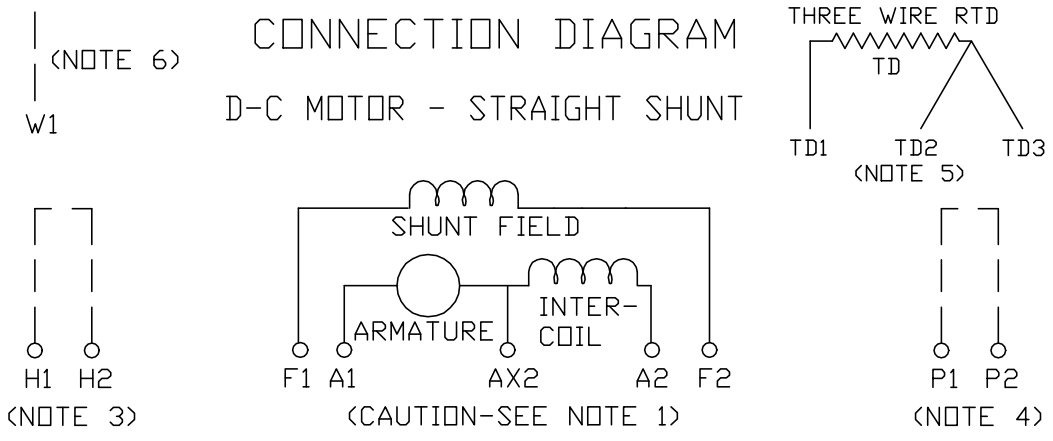


ARMATURE AND FIELD EXTERNAL CONNECTIONS
WARNING- SEE NOTE 7 FOR GROUNDING INSTRUCTIONS




ROTATION FACING COMMUTATOR END

1. CAUTION — ARMATURE MAY HAVE MULTIPLE LEADS. CONNECT ALL LUGS WITH THE SAME MARKING TOGETHER.
2. OPTIONAL CONTROL SIGNAL LEAD IS MARKED AX2. ALWAYS TAKE INTERPOLE DROP BETWEEN A2 AND AX2. NOTE: NEMA DESIGNATION FOR AX2 IS LETTER C.
3. SPACE HEATERS, WHEN PROVIDED, WILL HAVE LEADS MARKED H1 AND H2, H3, H4, ETC.
4. THERMAL PROTECTOR, WHEN PROVIDED, WILL HAVE LEADS MARKED P1 AND P2, P3, P4, ETC.
5. WINDING RTD'S, WHEN PROVIDED, WILL HAVE LEADS MARKED TD1, TD2, &TD3.
6. BRUSH WEAR SENSOR, WHEN PROVIDED, WILL HAVE LEAD MARKED W1.
7. WARNING — MOTOR MUST BE GROUNDED TO PREVENT SERIOUS INJURIES TO PERSONNEL. GROUND THE MOTOR PER IEC, NATIONAL ELECTRICAL CODE AND ANY APPLICABLE LOCAL ELECTRICAL CODES. A TAPPED HOLE IS PROVIDED IN THE CONDUIT BOX, ON THE FOOT, FRAME BRACE OR OPPOSITE OPPOSITE DRIVE END BRACKET, ADJACENT TO THE TERMINAL BOX FOR FOR MOTOR GROUNDING. GROUND LEAD, WHEN PROVIDED, WILL BE GREEN.

CUSTOMER _____ CUSTOMER ORDER NO. _____ RELIANCE S.O. NO. _____

BALDOR

D-C MOTOR CONNECTION DIAGRAM, STRAIGHT SHUNT

SH 1 of 1

REV. DESC: UPDATE LOGO AND TITLEBLOCK; LOADED TO BUS
REV. LTR: - | VERSION: 00 | TDR: 000000781086
FILE: \RSN\00026\515 | REVISED: 02:41:08 02/01/2013
MTL: - | BY: MGHPC