ABB BALDOR RELIANCE

Customer information packet

D5020R-BV

20HP, 1750RPM, DC, 2113ATZ, DPG-FV,

Copyright © All product information within this document is subject to ABB Motors and Mechanical Inc. copyright © protection, unless otherwise noted.
11/29/2026 5:24:42 AM

Specifications

Enclosure	DP
Frame	SC2113ATZ
Frame Material	Exposed Laminations
Output Power	20.000 HP
Agency Approvals	CCSA US
Ambient Temperature	40 °C
Bearing Grease Type	Polyrex EM (-20F +300F)
Drip Cover	No Drip Cover
Feedback Device	NO FEEDBACK
Field Winding Type	STR SHUNT
Frame Prefix	SC
Heater Indicator	No Heater
Lifting Lugs	Standard Lifting Lugs
Motor Standards	NEMA
Mounting Arrangement	F1
Overall Length	28.63 IN
Shaft Extension Location	Pulley End
Shaft Ground Indicator	No Shaft Grounding
Shaft Slinger Indicator	No Slinger

Part Detail

Revision	-
Type	DC
Mech. spec.	
Base	
Status	PRD/A
Elec. spec.	G6006D B
Layout	616002-001
Eff. date	04-13-2015
CD Diagram	406770-006
Poles	00
Leads	
Proprietary	False
Created date	04-09-2015

Nameplate

000613006HP								
CAT.NO.	D5020R-BV	**SPEC NO.**	T21T1350					
FR	SC 2113ATZ	**HP**	20	**DUTY**	CONT			
ENCL.	DP	**RPM**	1750/ 2300	**S.F.**	1.0			
ENCL MOD	FORCE VENT	**VOLTS**	500	**INSUL**	F			
MAX SAFE SPEED	4500	**AMPS**	37.00	**AMB.**	40			
	FIELD DATA	**SER.NO.**						
WINDING	STR SHUNT	**POWER CODE**	C					
VOLTS	300	**D.E. BRG.**	50BC03J30X					
MAX AMPS @ 25 C	3.04	**O.D.E. BRG.**	45BC02J30X					
HOT AMPS	2.17/ 1.45	**MIN. AMB.**	0	**TYPE**	TR			
	BRUSH:419904051AB							

INDUSTRIAL DIRECT CURRENT MOTORS AND GENERATORS – RPM III

ENCLOSURE: DRIP-PROOF FULLY-GUARDED, SPLASHPROOF

COOLING: FORCE VENTILATED WITH INTEGRAL BLOWER AND MOTOR

MOUNTING:FOOT

METHOD OF DRIVE:COUPLED OR BELTED

ACCESSORIES: PROVISION FOR TACHOMETER MOUNTING ONLY WHEN SPECIFIED

FRAMES SC2113ATZ THRU LC2115ATZ

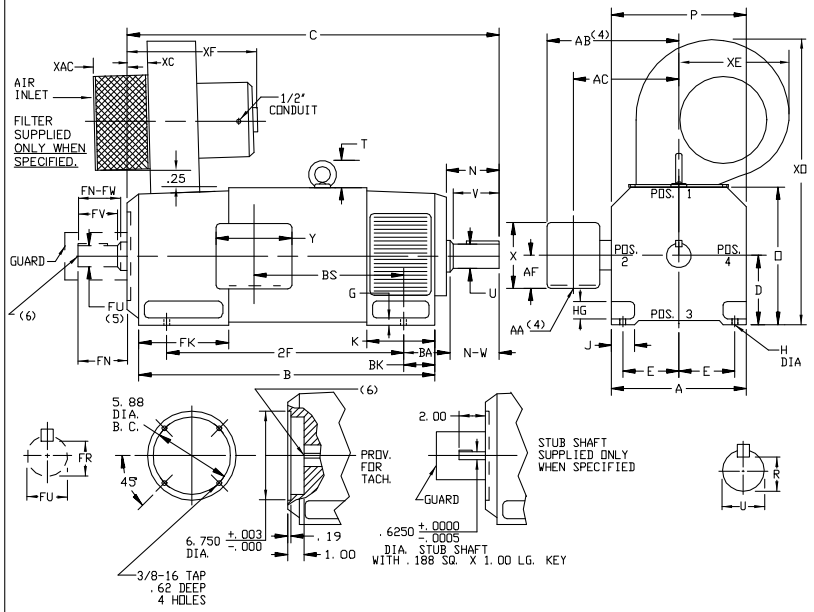

DIMENSIONS ARE IN INCHES

FRAME	XAC	XC	XE	XF	XO
SC2113ATZ–LC2115ATZ	7.75	2.25	10.00	16.00	22.75

FRAME	A	D(1)	E	G	H	HG	J	O	P	T	BA	K	FK	BK
SC2113ATZ–LC2115ATZ	10.25	5.25	4.25	.44	.44	1.38	1.75	10.44	10.31	2.08	3.50	5.19	6.81	2.38

					DRIVE END SHAFT AND KEY							OPPOSITE DRIVE END SHAFT AND KEY(5)							WT.
FRAME	C(7)	B	BS	2F	N	N–W	U(2)	V	R(3)	SQ.	LGTH.	FN	FN–FW	FU(2)	FV	FR(3)	SQ.	LGTH.	LBS.
SC2113ATZ	28.38	22.50	11.38	18.00	4.00	3.75	1.875	3.50	1.591	.500	2.50	3.50	3.25	1.625	3.00	1.416	.375	2.25	345
MC2113ATZ	29.62	23.75	12.62	18.00	4.00	3.75	1.875	3.50	1.591	.500	2.50	3.50	3.25	1.625	3.00	1.416	.375	2.25	370
LC2113ATZ	31.25	25.38	14.25	18.00	4.00	3.75	1.875	3.50	1.591	.500	2.50	3.50	3.25	1.625	3.00	1.416	.375	2.25	400
MC2115ATZ	32.50	26.62	15.50	22.00	4.00	3.75	1.875	3.50	1.591	.500	2.50	3.50	3.25	1.625	3.00	1.416	.375	2.25	425
LC2115ATZ	35.25	29.38	18.25	22.00	4.00	3.75	1.875	3.50	1.591	.500	2.50	3.50	3.25	1.625	3.00	1.416	.375	2.25	480

(1) 'D' DIMENSION WILL NOT BE EXCEEDED. SHIMS UP TO .03 INCHES IN THICKNESS ARE USUALLY REQUIRED FOR COUPLED OR GEARED MACHINES.
(2) 'U' AND 'FU' VARY----+.000 -.001
(3) 'R' AND 'FR' VARY----+.000 -.015
(4) TERMINAL BOX VARIES WITH H.P. FOR DIMENSIONS 'AA', 'AB', 'AC', 'AF', 'X' AND 'Y', REFER TO BOX D/S. (STD. 609959-1, 'X/P' 609959-2, MILL 609959-3)
(5) OPPOSITE DRIVE END SHAFT SUPPLIED ONLY WHEN SPECIFIED.
(6) MOTOR SHAFT TAPPED FOR SCREW-IN STUB SHAFT.
(7) WHEN THE MOTOR APPLICATION DOES NOT REQUIRE THE USE OF DPP. DRIVE END, ADD .25 TO 'C' DIM. FOR BRACKET COVER. TERMINAL BOX CAN BE ROTATED FOR LEAD OUTLET AT TOP, SIDES OR BOTTOM. TERMINAL BOX LOCATED ON OPPOSITE SIDE WHEN F-2, W-1, W-4, W-5, W-7, OR C-1 MOUNTING IS SPECIFIED. BOX LOCATED ON TOP WHEN SPECIFIED. BLOWER ASSEMBLY CAN BE LOCATED AT POSITIONS 1, 2, OR 4, EXCEPT BLOWER ASSEMBLY AND TERMINAL BOX CAN NOT BE LOCATED AT THE SAME POSITION. MOTOR WEIGHT MAY VARY 15% FOR NON-STANDARD RATINGS AND/OR ACCESSORIES. IF MOUNTING CLEARANCE DETAILS ARE REQUIRED, CONSULT FACTORY.

CUSTOMER IS RESPONSIBLE FOR DETERMINING THAT BALDOR'S PRODUCT WILL PERFORM SUITABLY IN THE INTENDED APPLICATION.

REV. DESC: LOADED TO BUS		
REV. LTR: –	VERSION: 00	TDR: 000000578087
FILE: \RGG\00015\944	REVISED: 08:22:49 01/28/2011	BY: CONNAS
MTL: –		

BALDOR

DIMENSION DRAWING,SC2113ATZ – LC2115ATZ,DPP,FOOT MTG

SH 1 of 1

616002–001

609959-001

INDUSTRIAL DIRECT CURRENT MOTORS AND GENERATORS - RPM III

TERMINAL BOX DIMENSIONS

STANDARD SIZE AND ONE SIZE LARGER

FRAMES C2113ATZ THRU C2815ATZ

DIMENSIONS ARE IN INCHES

STEEL TERMINAL BOX DIMENSIONS

FRAME SIZE	MAX. AMPS	AA(1)	STANDARD SIZE AB	AC	AF	X	Y	PART NUMBER	ONE SIZE LARGER AA(1)	AB	AC	AF	X	Y	PART NUMBER
C2113ATZ C2115ATZ (2)	40	3/4 & 1"	8.97	7.47	1.94	4.38	5.00	705028-1-R	1-1/4 & 1-1/2	10.03	8.03	2.50	5.50	6.12	705029-1-R
	96	1-1/4 & 1-1/2	10.03	8.03	2.50	5.50	6.12	705029-1-R	2" & 2-1/2	11.16	8.41	3.19	7.00	7.62	705030-1-R
	208	2" & 2-1/2	11.16	8.41	3.19	7.00	7.62	705030-1-R	2" & 2-1/2	11.16	8.41	3.19	7.00	7.62	705030-1-R
C2512ATZ C2514ATZ C2515ATZ (2)	40	3/4 & 1"	10.03	8.53	1.94	4.38	5.00	705028-1-R	1-1/4 & 1-1/2	11.09	9.09	2.50	5.50	6.12	705029-1-R
	96	1-1/4 & 1-1/2	11.09	9.09	2.50	5.50	6.12	705029-1-R	2" & 2-1/2	12.22	9.47	3.19	7.00	7.62	705030-1-R
	208	2" & 2-1/2	12.22	9.47	3.19	7.00	7.62	705030-1-R	2" & 2-1/2	12.22	9.47	3.19	7.00	7.62	705030-1-R
C2812ATZ C2813ATZ C2815ATZ	128	2"	14.03	10.53	4.25	8.44	7.25	74874-R	3"	14.47	11.22	4.25	8.44	7.25	74874-24-R
	185	3"	14.47	11.22	4.25	8.44	7.25	74874-24-R	4"	15.91	11.84	5.38	10.56	9.00	700308-3-R
	269	4"	15.91	11.84	5.38	10.56	9.00	700308-3-R	5" (4)	18.72	13.47	7.00	12.75	15.00	702658-1-C

CAST IRON TERMINAL BOX DIMENSIONS

FRAME SIZE	MAX. AMPS	AA(3)	STANDARD SIZE AB	AC	AF	X	Y	PART NUMBER	ONE SIZE LARGER AA(3)	AB	AC	AF	X	Y	PART NUMBER
C2113ATZ C2115ATZ	18	3/4	10.03	8.03	2.50	5.00	5.75	705028-2-S	1"	10.03	8.03	2.50	5.00	5.75	705028-2-T
	40	1"	10.03	8.03	2.50	5.00	5.75	705028-2-T	1-1/2	10.97	8.53	3.00	6.00	7.00	705029-2-R
	96	1-1/2	10.97	8.53	3.00	6.00	7.00	705029-2-R	2"	10.97	8.53	3.00	6.00	7.00	705029-2-S
	208	2"	10.97	8.53	3.00	6.00	7.00	705029-2-S	2-1/2	12.66	8.91	3.62	7.88	9.25	705030-2-R
C2512ATZ C2514ATZ C2515ATZ	18	1"	11.09	9.09	2.50	5.00	5.75	705028-2-S	1"	11.09	9.09	2.50	5.00	5.75	705028-2-T
	40	1"	11.09	9.09	2.50	5.00	5.75	705028-2-T	1-1/2	12.03	9.59	3.00	6.00	7.00	705029-2-R
	96	1-1/2	12.03	9.59	3.00	6.00	7.00	705029-2-R	2"	12.03	9.59	3.00	6.00	7.00	705029-2-S
	208	2"	12.03	9.59	3.00	6.00	7.00	705029-2-S	2-1/2	13.72	9.97	3.62	7.88	9.25	705030-2-R
C2812ATZ C2813ATZ C2815ATZ	128	2"	12.78	10.34	3.00	6.00	7.00	75460-T	3"	14.47	10.72	3.62	7.88	9.25	76700-RB
	185	3"	14.47	10.72	3.62	7.88	9.25	76700-RB	4"	15.78	11.59	4.12	9.50	10.50	76708-RR
	269	4"	15.78	11.59	4.12	9.50	10.50	76708-RR	5" (4)	18.59	13.34	7.00	12.75	15.00	76870-S

CONDUIT BOX DIMENSIONS WITH TERMINAL BOARDS (IEC TYPE BOX)

STANDARD SIZE

FRAME SIZE	AMPS	AB	AC	AF	X	AA	Y	PART NUMBER	PART NUMBER
C210	100	10.71	8.98	2.72	7.48	--	7.48	706310-56-A	706310-225-R
	200	11.26	9.25	3.35	8.82	--	8.82	706310-56-B	706310-226-R
C250	100	11.30	9.57	2.72	7.48	--	7.48	706310-56-A	706310-225-R
	200	11.85	9.84	3.35	8.82	--	8.82	706310-56-B	706310-226-R
	400	17.48	12.75	6.20	14.39	--	14.39	706310-63-B & 706310-63G	706310-63-B & 706310-63G
	800	17.48	12.75	6.20	14.39	--	14.39	706310-63-B & 706310-63G	706310-63-B & 706310-63G
C280	200	12.60	10.59	3.76	8.82	--	8.82	706310-56-B	706310-226-R
	400	18.27	13.54	6.20	14.39	--	14.39	706310-63-B & 706310-63G	706310-63-B & 706310-63G
	800	18.27	13.54	6.20	14.39	--	14.39	706310-63-B & 706310-63G	706310-63-B & 706310-63G
	1600	18.27	13.54	7.68	15.35	--	15.35	706310-63-C	706310-63-C

OPTIONAL AUXILIARY CONDUIT BOX DIMENSIONS (MAXIMUM)

FRAME SIZE	XAB	XX	XY	PART NUMBER	FRAME SIZE	XAB	XX	XY	PART NUMBER
C210	7.38	4.25	4.25	602007-26-A	C210	10.88	8.00	8.00	706310-3-B
C250	8.44	4.25	4.25	602007-26-A	C250	11.88	8.00	8.00	706310-3-B
C280	9.12	4.25	4.25	602007-26-A	C280	12.62	8.00	8.00	706310-3-B

(1) "AA" CONDUIT.
(2) STEEL TERMINAL BOX FOR C2113ATZ AND C2512ATZ FRAMES PROVIDED WITH DOUBLE KNOCKOUT.
(3) "AA" PIPE TAP.
(4) TERMINAL BOX 76870-S AND 76870-9R EXTENDS BELOW MOTOR FEET. TERMINAL BOX CAN BE ROTATED FOR LEAD OUTLET AT TOP, SIDES OR BOTTOM. TERMINAL BOX LOCATED ON OPPOSITE SIDE WHEN F-2, W-1, W-4, W-5, W-7, OR C-1 MOUNTING IS SPECIFIED. BOX LOCATED ON TOP WHEN SPECIFIED. FOR "X/P" TERMINAL BOX DIMENSIONS SEE 609959-2. FOR MILL TYPE TERMINAL BOX DIMENSIONS SEE 609959-3.

CUSTOMER IS RESPONSIBLE FOR DETERMINING THAT BALDOR'S PRODUCT WILL PERFORM SUITABLY IN THE INTENDED APPLICATION.

REV. DESC: ADD 706310-63G C/BOX TO C250 AND C280 FRAMES		BALDOR
REV. LTR: A	VERSION: 01	TDR: 000000816512
FILE: \RGG\00021\153		REVISED: 03:09:09 09/06/2013
MTL: -		BY: RGGWT

DIMENSION SHEET

SH 1 of 1

609959-001

406770-006

406770-006

CONNECTION DIAGRAM

D-C MOTOR - STRAIGHT SHUNT

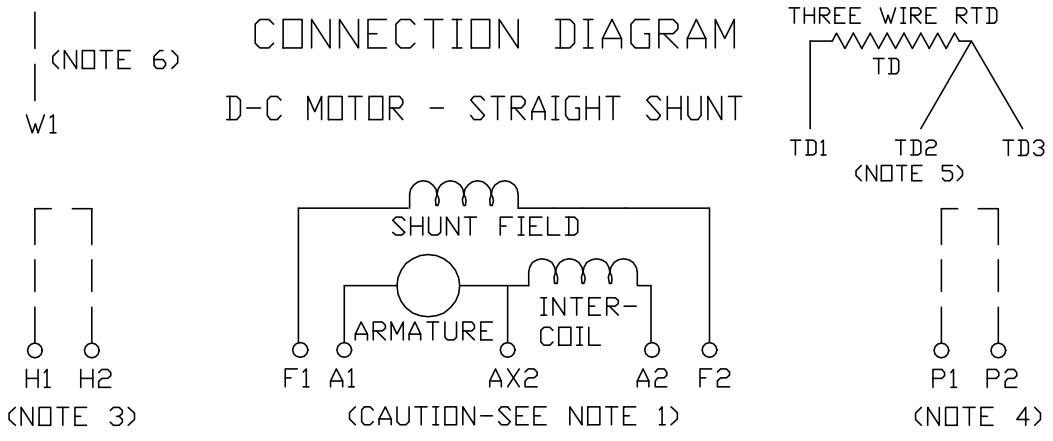

ARMATURE AND FIELD EXTERNAL CONNECTIONS
WARNING- SEE NOTE 7 FOR GROUNDING INSTRUCTIONS



ROTATION FACING COMMUTATOR END

1. CAUTION — ARMATURE MAY HAVE MULTIPLE LEADS. CONNECT ALL LUGS WITH THE SAME MARKING TOGETHER.
2. OPTIONAL CONTROL SIGNAL LEAD IS MARKED AX2. ALWAYS TAKE INTERPOLE DROP BETWEEN A2 AND AX2. NOTE: NEMA DESIGNATION FOR AX2 IS LETTER C.
3. SPACE HEATERS, WHEN PROVIDED, WILL HAVE LEADS MARKED H1 AND H2, H3, H4, ETC.
4. THERMAL PROTECTOR, WHEN PROVIDED, WILL HAVE LEADS MARKED P1 AND P2, P3, P4, ETC.
5. WINDING RTD'S, WHEN PROVIDED, WILL HAVE LEADS MARKED TD1, TD2, &TD3.
6. BRUSH WEAR SENSOR, WHEN PROVIDED, WILL HAVE LEAD MARKED W1.
7. WARNING — MOTOR MUST BE GROUNDED TO PREVENT SERIOUS INJURIES TO PERSONNEL. GROUND THE MOTOR PER IEC, NATIONAL ELECTRICAL CODE AND ANY APPLICABLE LOCAL ELECTRICAL CODES. A TAPPED HOLE IS PROVIDED IN THE CONDUIT BOX, ON THE FOOT, FRAME BRACE OR OPPOSITE OPPOSITE DRIVE END BRACKET, ADJACENT TO THE TERMINAL BOX FOR FOR MOTOR GROUNDING. GROUND LEAD, WHEN PROVIDED, WILL BE GREEN.

CUSTOMER _____ CUSTOMER ORDER NO. _____ RELIANCE S.O. NO. _____

BALDOR

D-C MOTOR CONNECTION DIAGRAM, STRAIGHT SHUNT

SH 1 of 1

REV. DESC: UPDATE LOGO AND TITLEBLOCK: LOADED TO BUS
REV. LTR: – | VERSION: 00 | TDR: 000000781086
FILE: \RSN\00026\515 | REVISED: 02:41:08 02/01/2013
MTL: – | BY: MGHPC