ABB BALDOR RELIANCE

# Customer information packet

D50125P

125HP, 1750/2000RPM, DC, 407AT, DPFG, FX, N

Copyright © All product information within this document is subject to ABB Motors and Mechanical Inc. copyright © protection, unless otherwise noted.
11/23/2026 3:08:53 PM

## Specifications

| | |
|---|---|
| **Armature Voltage** | 500 V |
| **Base Speed** | 1750 rpm |
| **Enclosure** | DPFG |
| **Field Voltage** | 150 V |
| | 300 V |
| **Frame** | 407AT |
| **Frame Material** | Steel |
| **Output Power** | 125.000 HP |
| **Agency Approvals** | CSA |
| **Ambient Temperature** | 40 °C |
| **Armature Current** | 200.0 a |
| **Bearing Grease Type** | Polyrex EM (-20F +300F) |
| **Drip Cover** | No Drip Cover |
| **Duty Rating** | CONT |
| **Feedback Device** | NO FEEDBACK |
| **Field Winding Type** | STR. SHUNT |
| **Heater Indicator** | No Heater |
| **Lifting Lugs** | Standard Lifting Lugs |
| **Motor Standards** | NEMA |
| **Mounting Arrangement** | F1 |
| **Overall Length** | 40.13 IN |
| **Service Factor** | 1.00 |
| **Shaft Extension Location** | Pulley End |
| **Shaft Ground Indicator** | No Shaft Grounding |
| **Shaft Slinger Indicator** | No Slinger |

## Part Detail

| | |
|---|---|
| **Revision** | D |
| **Type** | DC |
| **Mech. spec.** | |
| **Base** | |
| **Status** | PRD/A |
| **Elec. spec.** | K0069A A |
| **Layout** | 877-2 |
| **Eff. date** | 03-22-2022 |
| **CD Diagram** | 15209 |
| **Poles** | 00 |
| **Leads** | |
| **Proprietary** | False |
| **Created date** | 04-09-2015 |

**Nameplate**

| NP1734 | | | | | | | | | | |
|---|---|---|---|---|---|---|---|---|---|---|
| **CAT.NO.** | D50125P | | | **MODEL** | T40R8001 | | | | | |
| **HP** | 125 | **RPM** | 1750/2000 | | **FRAME** | 0407AT | | | | |
| **ARM V** | 500 | **ARM A** | 200.00 | | **WOUND** | STR. SHUNT | | | | |
| **FLD V** | 150/300 | **FLD A** | 9.18-6.00/4.59-3.00 | | | | | | | |
| **CONN** | | **OHMS** | | | **CL** | F | | | | |
| **ENCL** | DPFG | **DUTY** | CONT | | **MX AMB** | 40 | | | | |
| **P CODE** | D | **CTSR** | | | **SER.F.** | 1.0 | | | | |
| **S/N** | | | | **E/S** | K0069A A | | | | | |
| | BRUSH:40019-3 | | | | | | | | | |
| | | | | | | | | | | |
| **O.D.E. BRG.** | 6213 | **D.E. BRG.** | 6214 | | **BRUSH** | | | | **QTY** | |

**Accessories**

| Part number | Description | Multiplier |
|---|---|---|
| 96EP5000A01 | C-FACE CONVERSION KIT FOR STOCK MTR,FR 4 | |

| CUSTOMER NAME | MODEL NO. | | | MTG. | REMARKS: |
|---|---|---|---|---|---|
| CUSTOMER P.O. | FRAME | R.P.M. | VOLTS | PHASE | INSUL |
| CERTIFIED BY DATE | H.P. | TYPE | ENCL | FREQ. | AMB. |

SHEET 2 OF 3

| UNITS: INCH | SCALE: NONE | PROPORTION: NONE | PART NUMBER 877 | DWG.SIZE A |
|---|---|---|---|---|

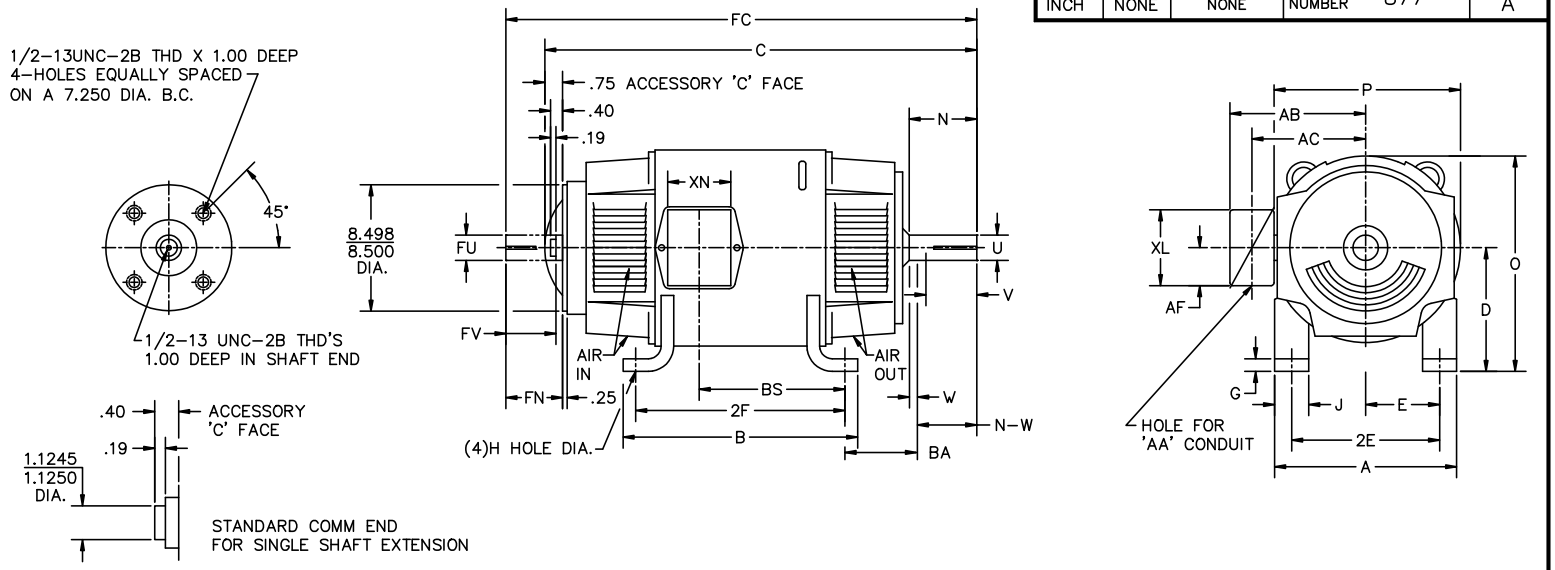


| | FOOT MOUNTING | | | | | | D.E. SHAFT EXTENSION | | | | | DRIVE KEY | | ACC SHAFT EXTENSION | | | ACC KEY | | FRAME | | | | | | |
|---|---|---|---|---|---|---|---|---|---|---|---|---|---|---|---|---|---|---|---|---|---|---|---|---|---|
| FRAME | BA | E | 2F | G | H | J | N | N–W | U | V | W | KEY–SQ. | KEY–LONG | FN | FU | FV | KEY–SQ. | KEY–LONG | A | B | C | FC | D | O | P |
| 407AT | 6.63 | 8.00 | 18.00 | .81 | .938 | 4.00 | 5.44 | 5.25 | 2.625 | 5.00 [3] | .19 | .625 | 4.00 | 4.95 | 2.375 | 4.70 | .625 | 3.50 | 20.00 | 20.00 | 40.13 | 44.34 | 10.00 [2] | 20.19 | 20.38 |
| L407AT | 6.63 | 8.00 | 18.00 | .81 | .938 | 4.00 | 5.44 | 5.25 | 2.625 | 5.00 [3] | .19 | .625 | 4.00 | 4.95 | 2.375 | 4.70 | .625 | 3.50 | 20.00 | 20.00 | 41.25 | 45.46 | 10.00 [2] | 20.19 | 20.38 |
| 409AT | 6.63 | 8.00 | 22.00 | .81 | .938 | 4.00 | 5.44 | 5.25 | 2.625 | 5.00 [3] | .19 | .625 | 4.00 | 4.95 | 2.375 | 4.70 | .625 | 3.50 | 20.00 | 24.00 | 44.63 | 48.84 | 10.00 [2] | 20.19 | 20.38 |
| L409AT | 6.63 | 8.00 | 22.00 | .81 | .938 | 4.00 | 5.44 | 5.25 | 2.625 | 5.00 [3] | .19 | .625 | 4.00 | 4.95 | 2.375 | 4.70 | .625 | 3.50 | 20.00 | 24.00 | 45.75 | 49.96 | 10.00 [2] | 20.19 | 20.38 |
| L4011AT | 6.63 | 8.00 | 28.00 | .81 | .938 | 4.00 | 5.44 | 5.25 | 2.625 | 5.00 [3] | .19 | .625 | 4.00 | 4.95 | 2.375 | 4.70 | .625 | 3.50 | 20.00 | 30.00 | 52.75 | 56.96 | 10.00 [2] | 20.19 | 20.38 |

| | CONDUIT BOX | | | | | | | ARM APPROX. WK$^2$ LBS.FT.$^2$ | APPROXIMATE WEIGHT |
|---|---|---|---|---|---|---|---|---|---|
| FRAME | AA | AB | AC | AF | BS | XL | XN | | |
| 407AT | 3 | 18.28 | 14.45 | 3.34 | 14.50 | 11.63 | 7.76 | 35.47 | 1317 [5] |
| L407AT | 3 | 18.28 | 14.45 | 3.34 | 15.62 | 11.63 | 7.76 | 35.47 | 1367 [5] |
| 409AT | 3 | 18.28 | 14.45 | 3.34 | 19.00 | 11.63 | 7.76 | 43.81 | 1613 [5] |
| L409AT | 3 | 18.28 | 14.45 | 3.34 | 20.12 | 11.63 | 7.76 | 43.81 | 1663 [5] |
| L4011AT | 4 | 19.28 | 14.63 | 3.50 | 27.70 | 13.40 | 13.50 | 55.64 | 2260 [5] |

1) SHAFT DIAMETERS TO 1.500 TOLERANCE +.0000 –.0005
SHAFT DIAMETERS ABOVE 1.500 TOLERANCE +.0000 –.0010
SHAFT DIAMETERS TO 1.625 RUNOUT .002 T.I.R. MAX.
SHAFT DIAMETERS ABOVE 1.625 RUNOUT .003 T.I.R. MAX.
2) 'D' DIMENSION TOLERANCE +.000 – .060
3) 'V' DIMENSION IS MAX. HUB LENGTH ON SHAFT
4) CONDUIT BOX CAN BE ROTATED IN 90° STEPS ON ITS OWN AXIS.
5) TOTAL WEIGHT OF MOTOR.
6) ALL DIMENSIONS NOT NOTED ARE NOMINAL DIMENSIONS CONSULT FACTORY FOR TOLERANCES.

FOR F1 OR F2 CONDUIT BOX
LOCATION SEE SALES ORDER

| REV. | ECO. | DESCRIPTION | BY | DATE |
|---|---|---|---|---|
| B | 54100 | ADD L4011AT FRAME | CSL | 3–16–1994 |

| DESIGNER | ENGINEER | ENGINEER | MANUF. |
|---|---|---|---|
| CSL 7–19–91 | RFL 7–19–91 | DAG 7–19–91 | RWT 7–19–91 |

BALDOR

TITLE: DIMENSION SHEET
DPFG, STD AT
SHEET 2 OF 3

| PART NUMBER | DWG.SIZE | REV. |
|---|---|---|
| 877 | A | B |

15209

ALUMINUM (MATT) BACKGROUND WITH BLACK LETTERS

LABEL MANUFACTURER IDENTIFYING MARK TO APPEAR HERE

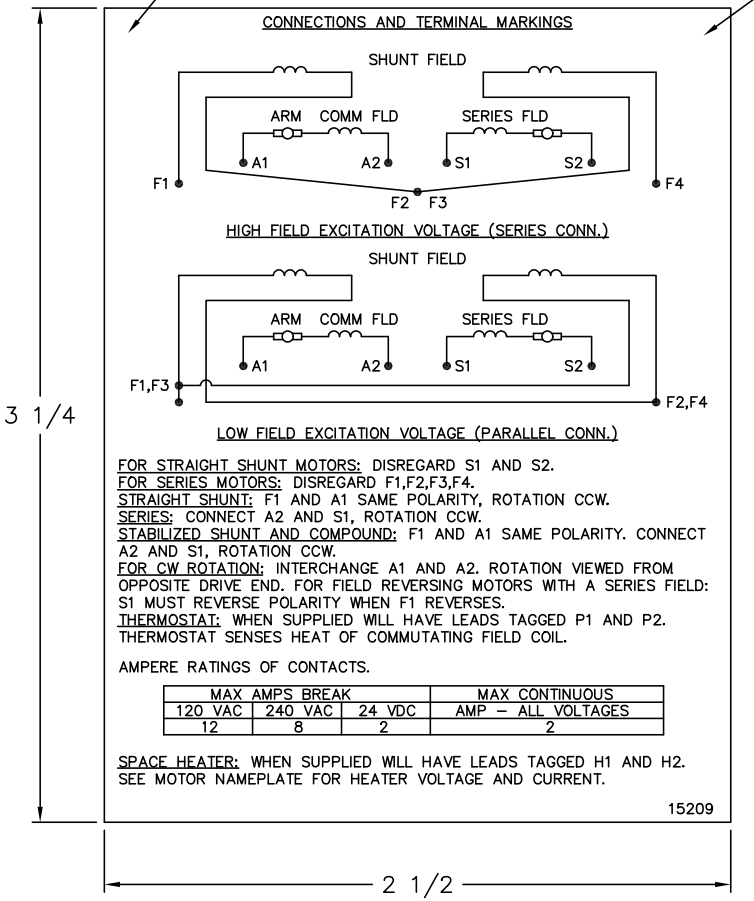


CONNECTIONS AND TERMINAL MARKINGS




HIGH FIELD EXCITATION VOLTAGE (SERIES CONN.)




LOW FIELD EXCITATION VOLTAGE (PARALLEL CONN.)

FOR STRAIGHT SHUNT MOTORS: DISREGARD S1 AND S2.
FOR SERIES MOTORS: DISREGARD F1,F2,F3,F4.
STRAIGHT SHUNT: F1 AND A1 SAME POLARITY, ROTATION CCW.
SERIES: CONNECT A2 AND S1, ROTATION CCW.
STABILIZED SHUNT AND COMPOUND: F1 AND A1 SAME POLARITY. CONNECT A2 AND S1, ROTATION CCW.
FOR CW ROTATION: INTERCHANGE A1 AND A2. ROTATION VIEWED FROM OPPOSITE DRIVE END. FOR FIELD REVERSING MOTORS WITH A SERIES FIELD: S1 MUST REVERSE POLARITY WHEN F1 REVERSES.
THERMOSTAT: WHEN SUPPLIED WILL HAVE LEADS TAGGED P1 AND P2. THERMOSTAT SENSES HEAT OF COMMUTATING FIELD COIL.

AMPERE RATINGS OF CONTACTS.

| MAX AMPS BREAK | | | MAX CONTINUOUS |
|---|---|---|---|
| 120 VAC | 240 VAC | 24 VDC | AMP – ALL VOLTAGES |
| 12 | 8 | 2 | 2 |

SPACE HEATER: WHEN SUPPLIED WILL HAVE LEADS TAGGED H1 AND H2. SEE MOTOR NAMEPLATE FOR HEATER VOLTAGE AND CURRENT.

15209

NOTE:
MATERIAL .005 MINUMUM FULL HARD ALUMINUM DULL FINISH.
TEMP. RANGE –20°C TO +125°C MAXIMUM.
FOR INDOOR AND OUTDOOR MOUNTING BACK.
METAL, PRESSURE SENSITIVE BACK.
MUST MEET CSA STANDARD.
THE CSA INDENTIFYING MARK OF THE LABEL MANUFACTURER MUST APPEAR IN THE UPPER RIGHT HAND CORNER AS INDICATED.

UNLESS OTHERWISE SPECIFIED,
BREAK ALL SHARP EDGES .010/.020.
REMOVE ALL BURRS.

TOLERANCES

| | |
|---|---|
| .X ±.015 | FRACTIONS ±1/32 |
| .XX ±.010 | RADII ±1/16 |
| .XXX +.005 | ANGLES ±1° |

| | | | | |
|---|---|---|---|---|
| MATL: NOTED | | | | BALDOR ELECTRIC Co. |
| REV: | G | CHANGE ALL "NAMEPLATE" TEXT TO "LABEL" | | |
| 15209 | SCALE: – | BY: BKW | REVISED: 02/19/97 | LABEL, CONNECTIONS AND TERMINAL MARKINGS DC |
| | FILE: CHB00002485 | | TDR: 0115147 | |

15209