ABB BALDOR RELIANCE

Customer information packet

D50100P2-BV

100HP, 1750/2000RPM, DC, 368AT, DPBV, F1, N

Copyright © All product information within this document is subject to ABB Motors and Mechanical Inc. copyright © protection, unless otherwise noted.
11/26/2026 6:14:01 PM

Specifications

Enclosure	DPBV
Frame	368AT
Frame Material	Steel
Output Power	100.000 HP
Agency Approvals	CSA
Ambient Temperature	40 °C
Bearing Grease Type	Polyrex EM (-20F +300F)
Drip Cover	No Drip Cover
Feedback Device	NO FEEDBACK
Field Winding Type	STR. SHUNT
Heater Indicator	No Heater
Lifting Lugs	Standard Lifting Lugs
Motor Standards	NEMA
Mounting Arrangement	F1
Overall Length	38.13 IN
Shaft Extension Location	Pulley End
Shaft Ground Indicator	No Shaft Grounding
Shaft Slinger Indicator	No Slinger

Part Detail

Revision	C
Type	DC
Mech. spec.	
Base	
Status	PRD/A
Elec. spec.	K0093A A
Layout	1336-4
Eff. date	08-01-2024
CD Diagram	15209
Poles	00
Leads	
Proprietary	False
Created date	04-09-2015

Nameplate

NP1734									
CAT.NO.	D50100P2-BV			**MODEL**	T36R8008				
HP	100	**RPM**	1750/2000		**FRAME**	0368AT			
ARM V	500	**ARM A**	158.00		**WOUND**	STR. SHUNT			
FLD V	150/300	**FLD A**	8.84-6.00/4.42-3.00						
CONN		**OHMS**			**CL**	F			
ENCL	DPBV	**DUTY**	CONT		**MX AMB**	40			
P CODE	C	**CTSR**			**SER.F.**	1.0			
S/N			**E/S**	K0093A A					
	BRUSH:36024-3								
O.D.E. BRG.	6211	**D.E. BRG.**	6213		**BRUSH**		**QTY**		

1336–4

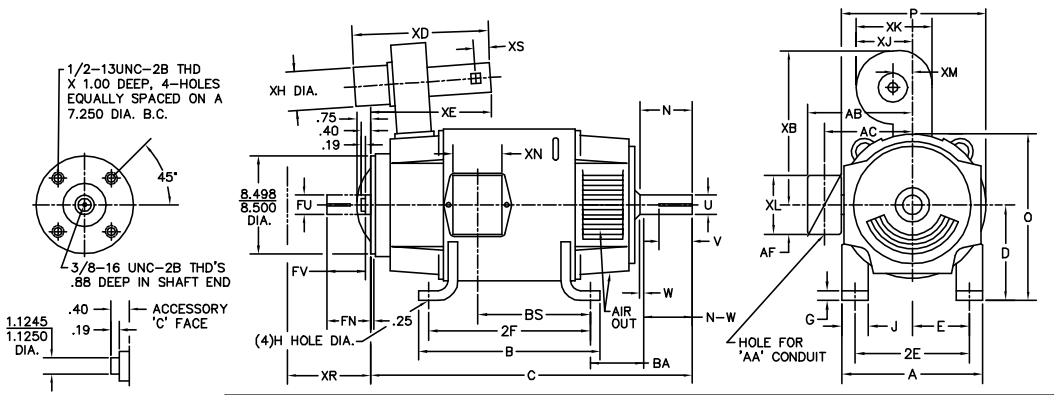

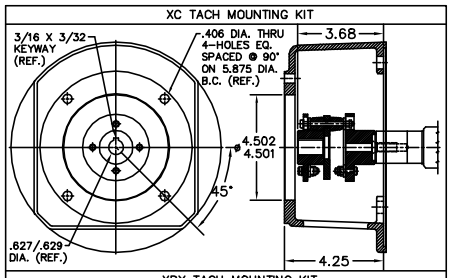

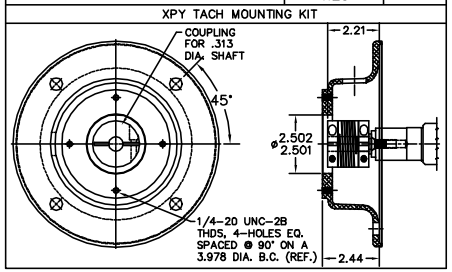

STANDARD COMM END FOR SINGLE SHAFT EXTENSION

TACHOMETER			
TACH	XR	LBS	FIG #
XPY	9.00	6.00	1
DPY	6.91	3.00	2
NCS	3.25	7.00	3
AC	2.77	7.00	3
XC42	12.49	25.00	4
XC46	14.50	35.00	4
XPYII	6.89	15.00	5

STANDARD TACHOMETER MOUNTINGS

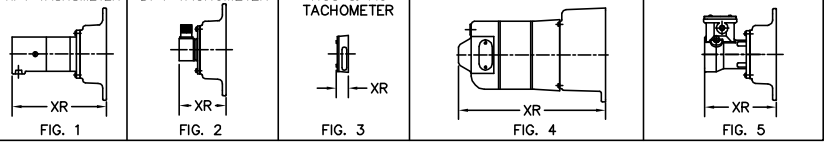

	FOOT MOUNTING						D.E. SHAFT EXTENSION					DRIVE KEY		ACC SHAFT EXTENSION			ACC KEY		FRAME					
FRAME	BA	E	2F	G	H	J	N	N–W	U	V	W	KEY–SQ.	KEY–LONG	FN	FU	FV	KEY–SQ.	KEY–LONG	A	B	C	D	O	P
327AT	5.25	6.25	14.00	.81	.656	3.00	4.40	4.25	2.125	4.00 [3]	.15	.500	3.12	3.94	1.875	3.69	.500	2.81	15.88	15.75	32.75	8.00 [2]	15.94	15.88
328AT	5.25	6.25	16.00	.81	.656	3.00	4.40	4.25	2.125	4.00 [3]	.15	.500	3.12	3.94	1.875	3.69	.500	2.81	15.88	17.75	34.63	8.00 [2]	15.94	15.88
329AT	5.25	6.25	18.00	.81	.656	3.00	4.40	4.25	2.125	4.00 [3]	.15	.500	3.12	3.94	1.875	3.69	.500	2.81	15.88	19.75	36.63	8.00 [2]	15.94	15.88
365AT	5.88	7.00	12.25	.81	.813	3.25	4.94	4.75	2.375	4.50 [3]	.19	.625	3.50	4.62	2.125	4.37	.500	3.13	17.75	13.75	32.94	9.00 [2]	17.94	17.88
366AT	5.88	7.00	14.00	.81	.813	3.25	4.94	4.75	2.375	4.50 [3]	.19	.625	3.50	4.62	2.125	4.37	.500	3.13	17.75	15.50	35.13	9.00 [2]	17.94	17.88
368AT	5.88	7.00	18.00	.81	.813	3.25	4.94	4.75	2.375	4.50 [3]	.19	.625	3.50	4.62	2.125	4.37	.500	3.13	17.75	19.50	38.13	9.00 [2]	17.94	17.88
3610AT	5.88	7.00	22.00	.81	.813	3.25	4.94	4.75	2.375	4.50 [3]	.19	.625	3.50	4.62	2.125	4.37	.500	3.13	17.75	23.50	41.45	9.00 [2]	17.94	17.88
3612AT	5.88	7.00	28.00	.81	.813	3.25	4.94	4.75	2.375	4.50 [3]	.19	.625	3.50	4.62	2.125	4.37	.500	3.13	17.75	29.50	45.56	9.00 [2]	17.94	17.88

	CONDUIT BOX						BLOWER									ARM APPROX. WK² LBS.FT.²	APPROXIMATE WEIGHT
FRAME	AA	AB	AC	AF	BS	XL	XN	SIZE	XB	XD	XE	XH	XM	XJ	XK	XS	
327AT	2	12.94	10.32	5.00	11.81	7.88	5.25	LM6	19.13	26.38	17.38	10.25	4.19	9.44	11.50	3.75	8.45	738 [5]
328AT	2	12.94	10.32	5.00	13.68	7.88	5.25	LM6	19.13	26.38	17.38	10.25	4.19	9.44	11.50	3.75	9.67	813 [5]
329AT	2	12.94	10.32	5.00	15.68	7.88	5.25	LM6	19.13	26.38	17.38	10.25	4.19	9.44	11.50	3.75	10.97	922 [5]
365AT	2 1/2	14.06	11.38	5.00	9.06	7.88	5.25	LM6	18.88	26.38	18.44	10.25	5.69	10.95	11.50	3.75	15.61	803 [5]
366AT	2 1/2	14.06	11.38	5.00	11.25	7.88	5.25	LM6	18.88	26.38	18.44	10.25	5.69	10.95	11.50	3.75	18.27	913 [5]
368AT	2 1/2	14.06	11.38	5.00	14.25	7.88	5.25	LM6	18.88	26.38	18.44	10.25	5.69	10.95	11.50	3.75	22.21	1073 [5]
3610AT	3	16.86	13.09	6.53	18.25	11.63	7.76	LM9	25.50	28.31	20.94	10.75	5.50	12.38	15.25	3.75	28.00	1109 [5]
3612AT	3	16.86	13.09	6.53	24.25	11.63	7.76	LM9	25.50	28.31	20.94	10.75	5.50	12.38	15.25	3.75	31.60	1145 [5]

1) SHAFT DIAMETERS TO 1.500 TOLERANCE +.0000 –.0005
SHAFT DIAMETERS ABOVE 1.500 TOLERANCE +.0000 –.0010
SHAFT DIAMETERS TO 1.625 RUNOUT .002 T.I.R. MAX.
SHAFT DIAMETERS ABOVE 1.625 RUNOUT .003 T.I.R. MAX.
2) 'D' DIMENSION TOLERANCE +.000 – .060
3) 'V' DIMENSION IS MAX. HUB LENGTH ON SHAFT
4) CONDUIT BOX CAN BE ROTATED IN 90° STEPS ON ITS OWN AXIS.
5) TOTAL WEIGHT OF MOTOR AND BLOWER LESS TACH WEIGHT.
6) ALL DIMENSIONS NOT NOTED ARE NOMINAL DIMENSIONS CONSULT FACTORY FOR TOLERANCES.

FOR F1 OR F2 CONDUIT BOX LOCATION SEE SALES ORDER

1336–4

CUSTOMER IS RESPONSIBLE FOR DETERMINING THAT BALDOR'S PRODUCT WILL PERFORM SUITABLY IN THE INTENDED APPLICATION.

REV. DESC: REV. "D" DIM TO +.000 –.060 ONLY			BALDOR
REV. LTR: G	VERSION: 01	TDR: 000000752448	
FILE: \RGG\00019\490		REVISED: 01:55:17 06/19/2012	DIM SHEET: 327–3612AT,DPBV,W/TACH
MTL: –		BY: RGGNAS	SH 1 of 1

35LYV523

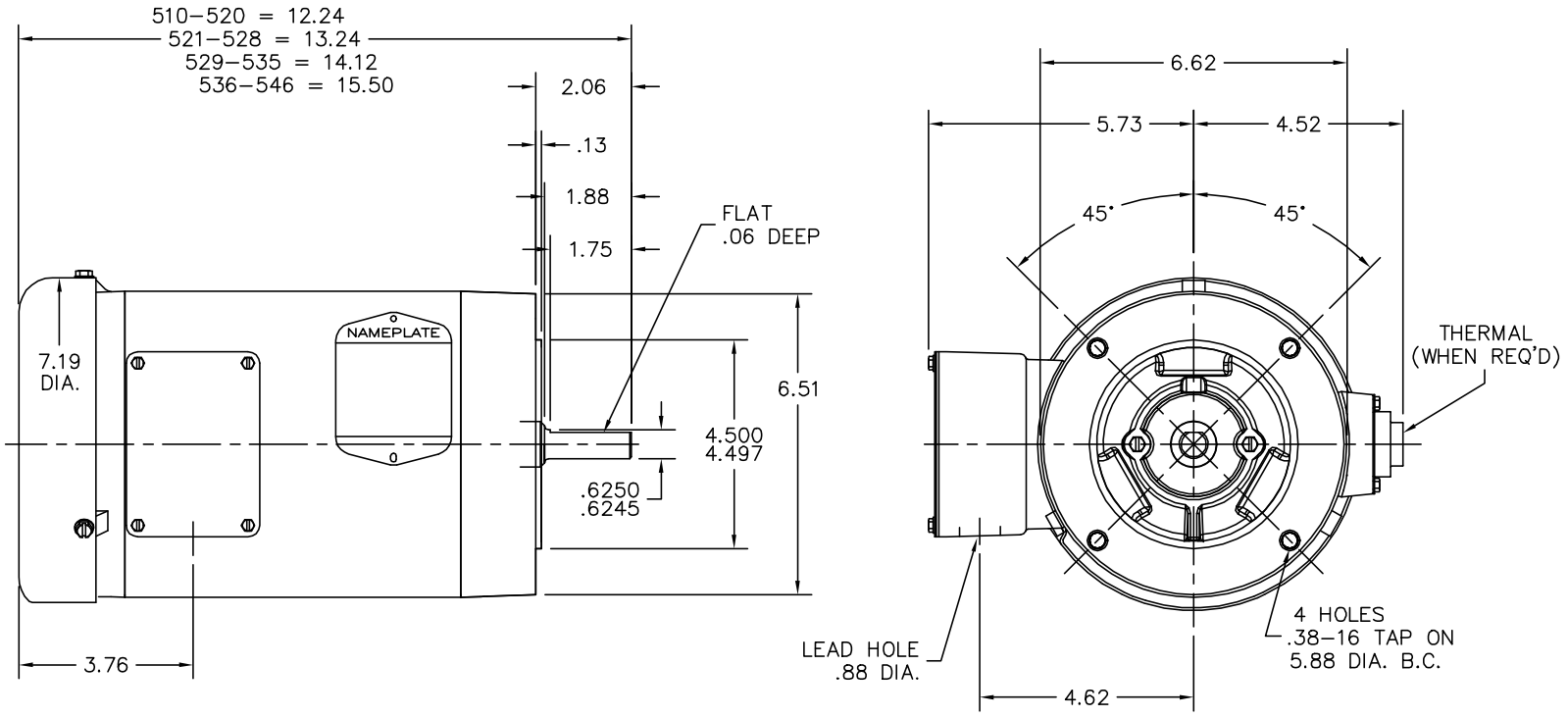

35LYV523

CUSTOMER IS RESPONSIBLE FOR DETERMINING THAT BALDOR'S PRODUCT WILL PERFORM SUITABLY IN THE INTENDED APPLICATION.

REV. DESC: LAYER CORRECTION		
REV. LTR: C	VERSION: 03	TDR: 000001065336
FILE: \AAA\00133\112	REVISED: 08:26:14 03/23/2018	BY: FPJEFGO
MTL: –		

BALDOR - RELIANCE®

VERT 56CZ TEFC 35M FLAT ONLY (NO KEYWAY)

SH 1 of 1

15209

ALUMINUM (MATT) BACKGROUND WITH BLACK LETTERS

LABEL MANUFACTURER IDENTIFYING MARK TO APPEAR HERE

3 1/4

CONNECTIONS AND TERMINAL MARKINGS

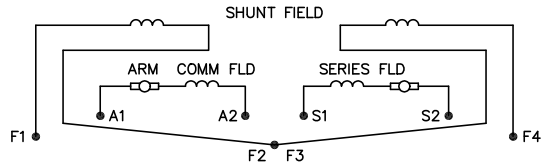

HIGH FIELD EXCITATION VOLTAGE (SERIES CONN.)

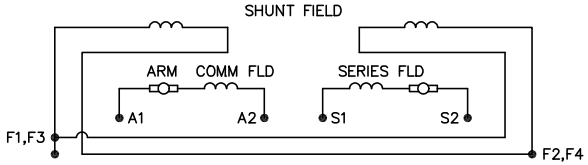

LOW FIELD EXCITATION VOLTAGE (PARALLEL CONN.)

FOR STRAIGHT SHUNT MOTORS: DISREGARD S1 AND S2.
FOR SERIES MOTORS: DISREGARD F1,F2,F3,F4.
STRAIGHT SHUNT: F1 AND A1 SAME POLARITY, ROTATION CCW.
SERIES: CONNECT A2 AND S1, ROTATION CCW.
STABILIZED SHUNT AND COMPOUND: F1 AND A1 SAME POLARITY. CONNECT A2 AND S1, ROTATION CCW.
FOR CW ROTATION: INTERCHANGE A1 AND A2. ROTATION VIEWED FROM OPPOSITE DRIVE END. FOR FIELD REVERSING MOTORS WITH A SERIES FIELD: S1 MUST REVERSE POLARITY WHEN F1 REVERSES.
THERMOSTAT: WHEN SUPPLIED WILL HAVE LEADS TAGGED P1 AND P2. THERMOSTAT SENSES HEAT OF COMMUTATING FIELD COIL.

AMPERE RATINGS OF CONTACTS.

MAX AMPS BREAK			MAX CONTINUOUS
120 VAC	240 VAC	24 VDC	AMP – ALL VOLTAGES
12	8	2	2

SPACE HEATER: WHEN SUPPLIED WILL HAVE LEADS TAGGED H1 AND H2. SEE MOTOR NAMEPLATE FOR HEATER VOLTAGE AND CURRENT.

15209

2 1/2

NOTE:
MATERIAL .005 MINUMUM FULL HARD ALUMINUM DULL FINISH.
TEMP. RANGE −20°C TO +125°C MAXIMUM.
FOR INDOOR AND OUTDOOR MOUNTING BACK.
METAL, PRESSURE SENSITIVE BACK.
MUST MEET CSA STANDARD.
THE CSA INDENTIFYING MARK OF THE LABEL MANUFACTURER MUST APPEAR IN THE UPPER RIGHT HAND CORNER AS INDICATED.

UNLESS OTHERWISE SPECIFIED,
BREAK ALL SHARP EDGES .010/.020.
REMOVE ALL BURRS.

TOLERANCES

.X ±.015 FRACTIONS ±1/32
.XX ±.010 RADII ±1/16
.XXX +.005 ANGLES ±1°

MATL: NOTED				
REV:	G	CHANGE ALL "NAMEPLATE" TEXT TO "LABEL"		
15209	SCALE: –	BY: BKW	REVISED: 02/19/97	
	FILE: CHB00002485		TDR: 0115147	

BALDOR ELECTRIC Co.

LABEL, CONNECTIONS AND TERMINAL MARKINGS DC

15209