ABB BALDOR RELIANCE

Customer information packet

D50100P

100HP, 1750/2000RPM, DC, 368AT, DPFG, FX, N

Copyright © All product information within this document is subject to ABB Motors and Mechanical Inc. copyright © protection, unless otherwise noted.
11/26/2026 6:14:01 PM

Specifications

Enclosure	DPFG
Frame	368AT
Frame Material	Steel
Output Power	100.000 HP
Agency Approvals	CSA
Ambient Temperature	40 °C
Bearing Grease Type	Polyrex EM (-20F +300F)
Drip Cover	No Drip Cover
Feedback Device	NO FEEDBACK
Field Winding Type	STR. SHUNT
Heater Indicator	No Heater
Lifting Lugs	Standard Lifting Lugs
Motor Standards	NEMA
Mounting Arrangement	F1
Overall Length	38.88 IN
Shaft Extension Location	Pulley End
Shaft Ground Indicator	No Shaft Grounding
Shaft Slinger Indicator	No Slinger

Part Detail

Revision	B
Type	DC
Mech. spec.	
Base	
Status	PRD/A
Elec. spec.	K0093A A
Layout	877-1
Eff. date	03-06-2019
CD Diagram	15209
Poles	00
Leads	
Proprietary	False
Created date	04-09-2015

Nameplate

NP1734									
CAT.NO.	D50100P			**MODEL**	T36R8003				
HP	100	**RPM**	1750/2000		**FRAME**	0368AT			
ARM V	500	**ARM A**	158.00		**WOUND**	STR. SHUNT			
FLD V	150/300	**FLD A**	8.84-6.00/4.42-3.00						
CONN		**OHMS**			**CL**	F			
ENCL	DPFG	**DUTY**	CONT		**MX AMB**	40			
P CODE	D	**CTSR**			**SER.F.**	1.0			
S/N				**E/S**	K0093A A				
	BRUSH:36024-3								
O.D.E. BRG.	6211	**D.E. BRG.**	6213		**BRUSH**		**QTY**		

Accessories

Part number	Description	Multiplier
D50100P	100HP,1750/2000RPM,DC,368AT,DPFG,FX,N	N2

877-1

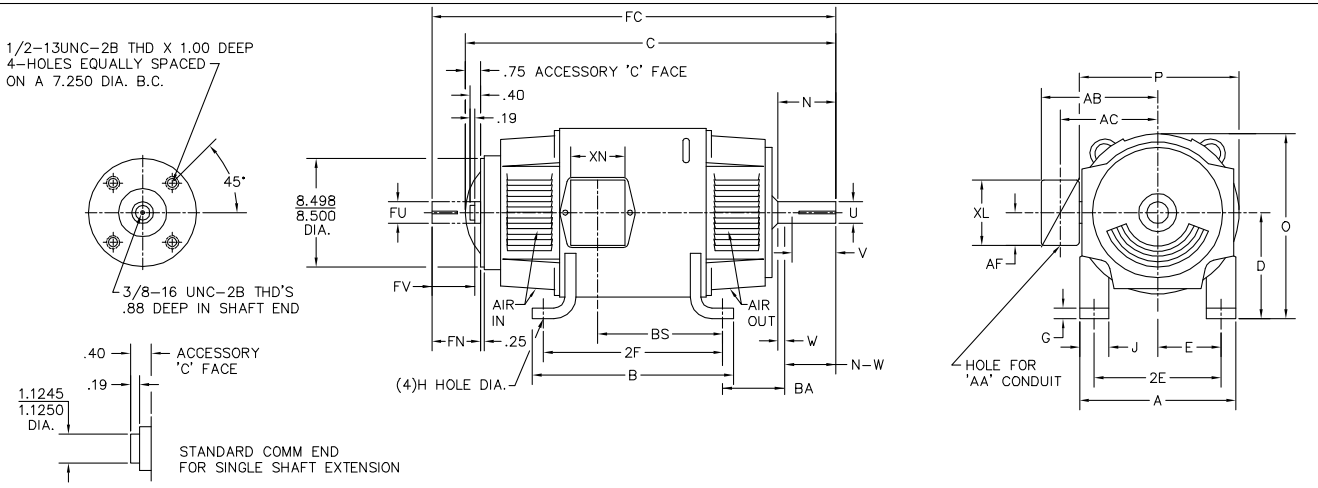

	FOOT MOUNTING						D.E. SHAFT EXTENSION					DRIVE KEY		ACC SHAFT EXTENSION			ACC KEY		FRAME						
FRAME	BA	E	2F	G	H	J	N	N-W	U	V	W	KEY-SQ.	KEY-LONG	FN	FU	FV	KEY-SQ.	KEY-LONG	A	B	C	FC	D	O	P
327AT	5.25	6.25	14.00	.81	.656	3.00	4.40	4.25	2.125	4.00 [3]	.15	.500	3.12	3.94	1.875	3.69	.500	2.81	15.88	15.75	33.50	36.71	8.00 [2]	15.94	15.88
328AT	5.25	6.25	16.00	.81	.656	3.00	4.40	4.25	2.125	4.00 [3]	.15	.500	3.12	3.94	1.875	3.69	.500	2.81	15.88	17.75	35.38	38.58	8.00 [2]	15.94	15.88
329AT	5.25	6.25	18.00	.81	.656	3.00	4.40	4.25	2.125	4.00 [3]	.15	.500	3.12	3.94	1.875	3.69	.500	2.81	15.88	19.75	37.38	40.58	8.00 [2]	15.94	15.88
365AT	5.88	7.00	12.25	.81	.813	3.25	4.94	4.75	2.375	4.50 [3]	.19	.625	3.50	4.62	2.125	4.37	.500	3.13	17.75	13.75	33.69	37.56	9.00 [2]	17.94	17.88
366AT	5.88	7.00	14.00	.81	.813	3.25	4.94	4.75	2.375	4.50 [3]	.19	.625	3.50	4.62	2.125	4.37	.500	3.13	17.75	15.50	35.88	39.75	9.00 [2]	17.94	17.88
368AT	5.88	7.00	18.00	.81	.813	3.25	4.94	4.75	2.375	4.50 [3]	.19	.625	3.50	4.62	2.125	4.37	.500	3.13	17.75	19.50	38.88	42.75	9.00 [2]	17.94	17.88
3610AT	5.88	7.00	22.00	.81	.813	3.25	4.94	4.75	2.375	4.50 [3]	.19	.625	3.50	4.62	2.125	4.37	.500	3.13	17.75	23.50	42.20	46.10	9.00 [2]	17.94	17.88
3612AT	5.88	7.00	28.00	.81	.813	3.25	4.94	4.75	2.375	4.50 [3]	.19	.625	3.50	4.62	2.125	4.37	.500	3.13	17.75	29.50	46.31	49.10	9.00 [2]	17.94	17.88

	CONDUIT BOX							ARM APPROX. WK^2 LBS.FT.^{2}	APPROXIMATE WEIGHT
FRAME	AA	AB	AC	AF	BS	XL	XN		
327AT	2	12.94	10.32	5.00	11.81	7.88	5.25	8.45	700 [5]
328AT	2	12.94	10.32	5.00	13.68	7.88	5.25	9.67	775 [5]
329AT	2	12.94	10.32	5.00	15.68	7.88	5.25	10.97	884 [5]
365AT	2 1/2	14.06	11.38	5.00	9.06	7.88	5.25	15.61	765 [5]
366AT	2 1/2	14.06	11.38	5.00	11.25	7.88	5.25	18.27	875 [5]
368AT	2 1/2	14.06	11.38	5.00	14.25	7.88	5.25	22.21	1035 [5]
3610AT	3	16.86	13.09	6.53	18.25	11.63	7.76	28.00	1070 [5]
3612AT	3	16.86	13.09	6.53	24.25	11.63	7.76	31.60	1136 [5]

1) SHAFT DIAMETERS TO 1.500 TOLERANCE +.0000 -.0005
SHAFT DIAMETERS ABOVE 1.500 TOLERANCE +.0000 -.0010
SHAFT DIAMETERS TO 1.625 RUNOUT .002 T.I.R. MAX.
SHAFT DIAMETERS ABOVE 1.625 RUNOUT .003 T.I.R. MAX.
2) 'D' DIMENSION TOLERANCE +.000 - .060
3) 'V' DIMENSION IS MAX. HUB LENGTH ON SHAFT
4) CONDUIT BOX CAN BE ROTATED IN 90° STEPS ON ITS OWN AXIS.
5) TOTAL WEIGHT OF MOTOR.
6) ALL DIMENSIONS NOT NOTED ARE NOMINAL DIMENSIONS CONSULT FACTORY FOR TOLERANCES.

FOR F1 OR F2 CONDUIT BOX
LOCATION SEE SALES ORDER

877-1

CUSTOMER IS RESPONSIBLE FOR DETERMINING THAT BALDOR'S PRODUCT WILL PERFORM SUITABLY IN THE INTENDED APPLICATION.

REV. DESC: RELOAD TO BUS		BALDOR
REV. LTR: C	VERSION: 02	TDR: 000000773327
FILE: \RGG\00019\101	REVISED: 10:43:23 11/09/2012	BY: RGGWT
MTL: -		DIM SHEET SH 1 of 1

15209

ALUMINUM (MATT) BACKGROUND WITH BLACK LETTERS

LABEL MANUFACTURER IDENTIFYING MARK TO APPEAR HERE

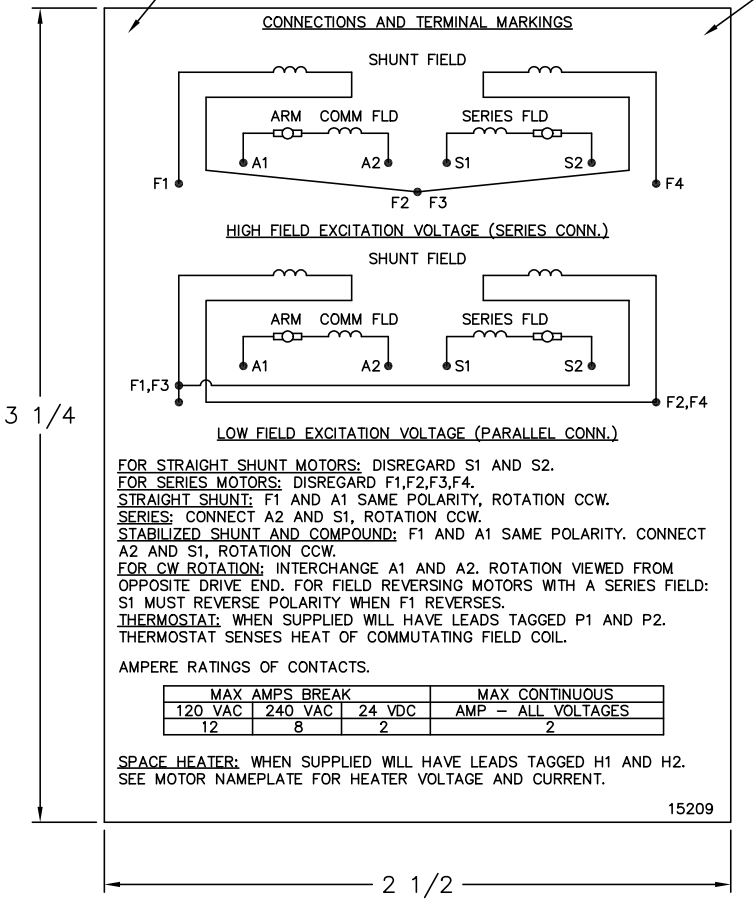

CONNECTIONS AND TERMINAL MARKINGS

HIGH FIELD EXCITATION VOLTAGE (SERIES CONN.)

LOW FIELD EXCITATION VOLTAGE (PARALLEL CONN.)

FOR STRAIGHT SHUNT MOTORS: DISREGARD S1 AND S2.
FOR SERIES MOTORS: DISREGARD F1,F2,F3,F4.
STRAIGHT SHUNT: F1 AND A1 SAME POLARITY, ROTATION CCW.
SERIES: CONNECT A2 AND S1, ROTATION CCW.
STABILIZED SHUNT AND COMPOUND: F1 AND A1 SAME POLARITY. CONNECT A2 AND S1, ROTATION CCW.
FOR CW ROTATION: INTERCHANGE A1 AND A2. ROTATION VIEWED FROM OPPOSITE DRIVE END. FOR FIELD REVERSING MOTORS WITH A SERIES FIELD: S1 MUST REVERSE POLARITY WHEN F1 REVERSES.
THERMOSTAT: WHEN SUPPLIED WILL HAVE LEADS TAGGED P1 AND P2. THERMOSTAT SENSES HEAT OF COMMUTATING FIELD COIL.

AMPERE RATINGS OF CONTACTS.

MAX AMPS BREAK			MAX CONTINUOUS
120 VAC	240 VAC	24 VDC	AMP – ALL VOLTAGES
12	8	2	2

SPACE HEATER: WHEN SUPPLIED WILL HAVE LEADS TAGGED H1 AND H2. SEE MOTOR NAMEPLATE FOR HEATER VOLTAGE AND CURRENT.

15209

NOTE:
MATERIAL .005 MINUMUM FULL HARD ALUMINUM DULL FINISH.
TEMP. RANGE –20°C TO +125°C MAXIMUM.
FOR INDOOR AND OUTDOOR MOUNTING BACK.
METAL, PRESSURE SENSITIVE BACK.
MUST MEET CSA STANDARD.
THE CSA INDENTIFYING MARK OF THE LABEL MANUFACTURER MUST APPEAR IN THE UPPER RIGHT HAND CORNER AS INDICATED.

UNLESS OTHERWISE SPECIFIED,
BREAK ALL SHARP EDGES .010/.020.
REMOVE ALL BURRS.

TOLERANCES

.X ±.015	FRACTIONS ±1/32
.XX ±.010	RADII ±1/16
.XXX +.005	ANGLES ±1°

MATL: NOTED				BALDOR ELECTRIC Co.
REV:	G	CHANGE ALL "NAMEPLATE" TEXT TO "LABEL"		
15209	SCALE: –	BY: BKW	REVISED: 02/19/97	LABEL, CONNECTIONS AND TERMINAL MARKINGS DC
	FILE: CHB00002485		TDR: 0115147	

15209