ABB BALDOR RELIANCE

Customer information packet

D2025R

25HP, 1750RPM, DC, 2113ATZ, DPG,

Copyright © All product information within this document is subject to ABB Motors and Mechanical Inc. copyright © protection, unless otherwise noted.
11/26/2026 7:43:32 PM

Specifications

Enclosure	DP
Frame	LC2113ATZ
Frame Material	Steel
Output Power	25.000 HP
Agency Approvals	CCSA US
Ambient Temperature	40 °C
Bearing Grease Type	Polyrex EM (-20F +300F)
Drip Cover	No Drip Cover
Feedback Device	NO FEEDBACK
Field Winding Type	STAB SHUNT
Frame Prefix	LC
Heater Indicator	No Heater
Lifting Lugs	Standard Lifting Lugs
Motor Standards	NEMA
Mounting Arrangement	F1
Overall Length	31.25 IN
Shaft Extension Location	Pulley End
Shaft Ground Indicator	No Shaft Grounding
Shaft Slinger Indicator	No Slinger

Part Detail

Revision	-
Type	DC
Mech. spec.	
Base	
Status	PRD/A
Elec. spec.	G6069B B
Layout	609950-001
Eff. date	04-13-2015
CD Diagram	406770-001
Poles	00
Leads	
Proprietary	False
Created date	04-09-2015

Nameplate

000613006HP								
CAT.NO.	D2025R	**SPEC NO.**	T21S1332					
FR	LC 2113ATZ	**HP**	25	**DUTY**	CONT			
ENCL.	DP	**RPM**	1750/ 2300	**S.F.**	1.0			
ENCL MOD	GUARDED	**VOLTS**	240	**INSUL**	F			
MAX SAFE SPEED	4500	**AMPS**	91.50	**AMB.**	40			
	FIELD DATA	**SER.NO.**						
WINDING	STAB SHUNT	**POWER CODE**	C					
VOLTS	150	**D.E. BRG.**	50BC03J30X					
MAX AMPS @ 25 C	5.84	**O.D.E. BRG.**	45BC02J30X					
HOT AMPS	3.89/ 2.37	**MIN. AMB.**	0	**TYPE**	TR			
	BRUSH:419904051AB							

609950-001

INDUSTRIAL DIRECT CURRENT MOTORS AND GENERATORS – RPM III

ENCLOSURE: DRIP-PROOF FULLY-GUARDED, SPLASHPROOF, TOTALLY ENCLOSED

COOLING: SELF-VENTILATED NON-VENTILATED

MOUNTING:FOOT

METHOD OF DRIVE:COUPLED OR BELTED

ACCESSORIES: PROVISION FOR TACHOMETER MOUNTING ONLY WHEN SPECIFIED

FRAMES SC2113ATZ THRU LC2812ATZ

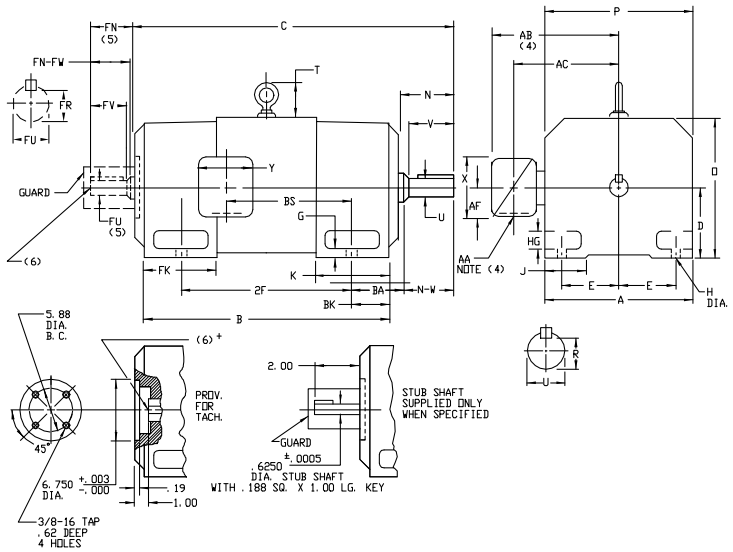

DIMENSIONS ARE IN INCHES; SEE 609950-1M FOR DIMENSIONS IN MILLIMETERS

FRAME	A	D(1)	E	G	H	HG	J	O	P	T	BA	K	FK	BK
SC2113ATZ-LC2113ATZ	10.25	5.25	4.25	.44	.44	1.38	1.75	10.44	10.31	2.56	3.50	5.19	6.81	2.38
SC2512ATZ-LC2512ATZ	12.31	6.25	5.00	.50	.56	1.62	2.00	12.50	12.44	3.06	4.25	6.06	8.00	3.00
MC2812ATZ-LC2812ATZ	13.78	7.00	5.50	.62	.56	1.88	2.75	14.00	13.94	3.38	4.75	6.75	9.19	3.50

FRAME	C(7)	B	BS	2F	DRIVE END SHAFT AND KEY							OPPOSITE DRIVE END SHAFT AND KEY(5)							WT. LBS.
					N	N-W	U(2)	V	R(3)	SQ.	LGTH.	FN	FN-FW	FU(2)	FV	FR(3)	SQ.	LGTH.	
SC2113ATZ	28.38	22.50	11.38	18.00	4.00	3.75	1.875	3.50	1.591	.500	2.50	3.50	3.25	1.625	3.00	1.416	.375	2.25	315
MC2113ATZ	29.62	23.75	12.62	18.00	4.00	3.75	1.875	3.50	1.591	.500	2.50	3.50	3.25	1.625	3.00	1.416	.375	2.25	340
LC2113ATZ	31.25	25.38	14.25	18.00	4.00	3.75	1.875	3.50	1.591	.500	2.50	3.50	3.25	1.625	3.00	1.416	.375	2.25	370
SC2512ATZ	31.69	25.06	12.06	20.00	4.50	4.25	2.125	4.00	1.845	.500	3.00	4.00	3.75	1.875	3.50	1.591	.500	2.50	505
MC2512ATZ	33.19	26.56	13.56	20.00	4.50	4.25	2.125	4.00	1.845	.500	3.00	4.00	3.75	1.875	3.50	1.591	.500	2.50	540
LC2512ATZ	34.69	28.06	15.06	20.00	4.50	4.25	2.125	4.00	1.845	.500	3.00	4.00	3.75	1.875	3.50	1.591	.500	2.50	580
MC2812ATZ	37.38	29.94	14.25	22.00	5.00	4.75	2.375	4.50	2.021	.625	3.50	4.50	4.25	2.125	4.00	1.845	.500	3.00	775
LC2812ATZ	39.62	32.19	16.50	22.00	5.00	4.75	2.375	4.50	2.021	.625	3.50	4.50	4.25	2.125	4.00	1.845	.500	3.00	850

(1) 'D' DIMENSION WILL NOT BE EXCEEDED. SHIMS UP TO .03 INCHES IN THICKNESS ARE USUALLY REQUIRED FOR COUPLED OR GEARED MACHINES.
(2) 'U' AND 'FU' VARY----+.000 -.001
(3) 'R' AND 'FR' VARY----+.000 -.015
(4) TERMINAL BOX VARIES WITH H.P. FOR DIMENSIONS 'AA', 'AB', 'AC', 'AF', 'X' AND 'Y', REFER TO BOX D/S. (STD. 609959-1, 'X/P' 609959-2, MILL 609959-3)
(5) OPPOSITE DRIVE END SHAFT SUPPLIED ONLY WHEN SPECIFIED.
(6) MOTOR SHAFT TAPPED FOR SCREW-IN STUB SHAFT.
(7) WHEN THE MOTOR APPLICATION DOES NOT REQUIRE THE USE OF OPP. DRIVE END, ADD .25 TO 'C' DIM. FOR BRACKET COVER.

TERMINAL BOX CAN BE ROTATED FOR LEAD OUTLET AT TOP, SIDES OR BOTTOM. TERMINAL BOX LOCATED ON OPPOSITE SIDE WHEN F-2, W-1, W-4, W-5, W-7, OR C-1 MOUNTING IS SPECIFIED. BOX LOCATED ON TOP WHEN SPECIFIED. MOTOR WEIGHT MAY VARY 15% FOR NON-STANDARD RATINGS AND/OR ACCESSORIES. IF MOUNTING CLEARANCE DETAILS ARE REQUIRED, CONSULT FACTORY.

CUSTOMER IS RESPONSIBLE FOR DETERMINING THAT BALDOR'S PRODUCT WILL PERFORM SUITABLY IN THE INTENDED APPLICATION.

REV. DESC: LOADED TO BUS		
REV. LTR: –	VERSION: 00	TDR: 000000577407
FILE: \RGG\00015\543	REVISED: 10:21:19 01/26/2011	BY: RGGBG
MTL: –		

BALDOR

DIMENSION DRAWING,SC2113ATZ – LC2812ATZ,DPP,TENV,FOOT MTG

SH 1 of 1

609950-001

609959-001

INDUSTRIAL DIRECT CURRENT MOTORS AND GENERATORS – RPM III

TERMINAL BOX DIMENSIONS

STANDARD SIZE AND ONE SIZE LARGER FRAMES C2113ATZ THRU C2815ATZ

DIMENSIONS ARE IN INCHES

FRAME SIZE	MAX. AMPS	STANDARD SIZE							ONE SIZE LARGER						
		AA(1)	AB	AC	AF	X	Y	PART NUMBER	AA(1)	AB	AC	AF	X	Y	PART NUMBER
C2113ATZ C2115ATZ (2)	40	3/4 & 1"	8.97	7.47	1.94	4.38	5.00	705028-1-R	1-1/4 & 1-1/2	10.03	8.03	2.50	5.50	6.12	705029-1-R
	96	1-1/4 & 1-1/2	10.03	8.03	2.50	5.50	6.12	705029-1-R	2" & 2-1/2	11.16	8.41	3.19	7.00	7.62	705030-1-R
	208	2" & 2-1/2	11.16	8.41	3.19	7.00	7.62	705030-1-R	2" & 2-1/2	11.16	8.41	3.19	7.00	7.62	705030-1-R
C2512ATZ C2514ATZ C2515ATZ (2)	40	3/4 & 1"	10.03	8.53	1.94	4.38	5.00	705028-1-R	1-1/4 & 1-1/2	11.09	9.09	2.50	5.50	6.12	705029-1-R
	96	1-1/4 & 1-1/2	11.09	9.09	2.50	5.50	6.12	705029-1-R	2" & 2-1/2	12.22	9.47	3.19	7.00	7.62	705030-1-R
	208	2" & 2-1/2	12.22	9.47	3.19	7.00	7.62	705030-1-R	2" & 2-1/2	12.22	9.47	3.19	7.00	7.62	705030-1-R
C2812ATZ C2813ATZ C2815ATZ	128	2"	14.03	10.53	4.25	8.44	7.25	74874-R	3"	14.47	11.22	4.25	8.44	7.25	74874-24-R
	185	3"	14.47	11.22	4.25	8.44	7.25	74874-24-R	4"	15.91	11.84	5.38	10.56	9.00	700308-3-R
	269	4"	15.91	11.84	5.38	10.56	9.00	700308-3-R	5" (4)	18.72	13.47	7.00	12.75	15.00	702658-1-C

CAST IRON TERMINAL BOX DIMENSIONS

FRAME SIZE	MAX. AMPS	STANDARD SIZE							ONE SIZE LARGER						
		AA(3)	AB	AC	AF	X	Y	PART NUMBER	AA(3)	AB	AC	AF	X	Y	PART NUMBER
C2113ATZ C2115ATZ	18	3/4	10.03	8.03	2.50	5.00	5.75	705028-2-S	1"	10.03	8.03	2.50	5.00	5.75	705028-2-T
	40	1"	10.03	8.03	2.50	5.00	5.75	705028-2-T	1-1/2	10.97	8.53	3.00	6.00	7.00	705029-2-R
	96	1-1/2	10.97	8.53	3.00	6.00	7.00	705029-2-R	2"	10.97	8.53	3.00	6.00	7.00	705029-2-S
	208	2"	10.97	8.53	3.00	6.00	7.00	705029-2-S	2-1/2	12.66	8.91	3.62	7.88	9.25	705030-2-R
C2512ATZ C2514ATZ C2515ATZ	18	1"	11.09	9.09	2.50	5.00	5.75	705028-2-S	1"	11.09	9.09	2.50	5.00	5.75	705028-2-T
	40	1"	11.09	9.09	2.50	5.00	5.75	705028-2-T	1-1/2	12.03	9.59	3.00	6.00	7.00	705029-2-R
	96	1-1/2	12.03	9.59	3.00	6.00	7.00	705029-2-R	2"	12.03	9.59	3.00	6.00	7.00	705029-2-S
	208	2"	12.03	9.59	3.00	6.00	7.00	705029-2-S	2-1/2	13.72	9.97	3.62	7.88	9.25	705030-2-R
C2812ATZ C2813ATZ C2815ATZ	128	2"	12.78	10.34	3.00	6.00	7.00	75460-T	3"	14.47	10.72	3.62	7.88	9.25	76700-RB
	185	3"	14.47	10.72	3.62	7.88	9.25	76700-RB	4"	15.78	11.59	4.12	9.50	10.50	76708-RR
	269	4"	15.78	11.59	4.12	9.50	10.50	76708-RR	5" (4)	18.59	13.34	7.00	12.75	15.00	76870-S

CONDUIT BOX DIMENSIONS WITH TERMINAL BOARDS (IEC TYPE BOX)

STANDARD SIZE								
FRAME SIZE	AMPS	AB	AC	AF	X	AA	Y	PART NUMBER
C210	100	10.71	8.98	2.72	7.48	--	7.48	706310-56-A
	200	11.26	9.25	3.35	8.82	--	8.82	706310-56-B
	100	11.30	9.57	2.72	7.48	--	7.48	706310-56-A
C250	200	11.85	9.84	3.35	8.82	--	8.82	706310-56-B
	400	17.48	12.75	6.20	14.39	--	14.39	706310-63-B & 706310-63G
	800	17.48	12.75	6.20	14.39	--	14.39	706310-63-B & 706310-63G
C280	200	12.60	10.59	3.76	8.82	--	8.82	706310-56-B
	400	18.27	13.54	6.20	14.39	==	14.39	706310-63-B & 706310-63G
	800	18.27	13.54	6.20	14.39	--	14.39	706310-63-B & 706310-63G
	1600	18.27	13.54	7.68	15.35	--	15.35	706310-63-C

STANDARD SIZE								
FRAME SIZE	AMPS	AB	AC	AF	X	AA	Y	PART NUMBER
C210	100	10.71	8.98	2.72	7.48	--	7.48	706310-56-A
	200	11.26	9.25	3.35	8.82	--	8.82	706310-56-B
	100	11.30	9.57	2.72	7.48	--	7.48	706310-56-A
C250	200	11.85	9.84	3.35	8.82	--	8.82	706310-56-B
	400	17.48	12.75	6.20	14.39	--	14.39	706310-63-B & 706310-63G
	800	17.48	12.75	6.20	14.39	--	14.39	706310-63-B & 706310-63G
C280	200	12.60	10.59	3.76	8.82	--	8.82	706310-56-B
	400	18.27	13.54	6.20	14.39	==	14.39	706310-63-B & 706310-63G
	800	18.27	13.54	6.20	14.39	--	14.39	706310-63-B & 706310-63G
	1600	18.27	13.54	7.68	15.35	--	15.35	706310-63-C

STANDARD SIZE								
FRAME SIZE	AMPS	AB	AC	AF	X	AA	Y	PART NUMBER
C210	100	10.71	8.98	2.72	7.48	--	7.48	706310-56-A
	200	11.26	9.25	3.35	8.82	--	8.82	706310-56-B
	100	11.30	9.57	2.72	7.48	--	7.48	706310-56-A
C250	200	11.85	9.84	3.35	8.82	--	8.82	706310-56-B
	400	17.48	12.75	6.20	14.39	--	14.39	706310-63-B & 706310-63G
	800	17.48	12.75	6.20	14.39	--	14.39	706310-63-B & 706310-63G
C280	200	12.60	10.59	3.76	8.82	--	8.82	706310-56-B
	400	18.27	13.54	6.20	14.39	==	14.39	706310-63-B & 706310-63G
	800	18.27	13.54	6.20	14.39	--	14.39	706310-63-B & 706310-63G
	1600	18.27	13.54	7.68	15.35	--	15.35	706310-63-C

STANDARD SIZE								
FRAME SIZE	AMPS	AB	AC	AF	X	AA	Y	PART NUMBER
C210	100	10.71	8.98	2.72	7.48	--	7.48	706310-56-A
	200	11.26	9.25	3.35	8.82	--	8.82	706310-56-B
	100	11.30	9.57	2.72	7.48	--	7.48	706310-56-A
C250	200	11.85	9.84	3.35	8.82	--	8.82	706310-56-B
	400	17.48	12.75	6.20	14.39	--	14.39	706310-63-B & 706310-63G
	800	17.48	12.75	6.20	14.39	--	14.39	706310-63-B & 706310-63G
C280	200	12.60	10.59	3.76	8.82	--	8.82	706310-56-B
	400	18.27	13.54	6.20	14.39	==	14.39	706310-63-B & 706310-63G
	800	18.27	13.54	6.20	14.39	--	14.39	706310-63-B & 706310-63G
	1600	18.27	13.54	7.68	15.35	--	15.35	706310-63-C

OPTIONAL AUXILIARY CONDUIT BOX DIMENSIONS (MAXIMUM)

FRAME SIZE	XAB	XX	XY	PART NUMBER
C210	7.38	4.25	4.25	602007-26-A
C250	8.44	4.25	4.25	602007-26-A
C280	9.12	4.25	4.25	602007-26-A

OPTIONAL AUXILIARY CONDUIT BOX DIMENSIONS (MAXIMUM)

FRAME SIZE	XAB	XX	XY	PART NUMBER
C210	10.88	8.00	8.00	706310-3-B
C250	11.88	8.00	8.00	706310-3-B
C280	12.62	8.00	8.00	706310-3-B

(1) "AA" CONDUIT.
(2) STEEL TERMINAL BOX FOR C2113ATZ AND C2512ATZ FRAMES PROVIDED WITH DOUBLE KNOCKOUT.
(3) "AA" PIPE TAP.
(4) TERMINAL BOX 76870-S AND 76870-SR EXTENDS BELOW MOTOR FEET. TERMINAL BOX CAN BE ROTATED FOR LEAD OUTLET AT TOP, SIDES OR BOTTOM. TERMINAL BOX LOCATED ON OPPOSITE SIDE WHEN F-2, W-1, W-4, W-5, W-7, OR C-1 MOUNTING IS SPECIFIED. BOX LOCATED ON TOP WHEN SPECIFIED. FOR "X/P" TERMINAL BOX DIMENSIONS SEE 609959-2. FOR MILL TYPE TERMINAL BOX DIMENSIONS SEE 609959-3.

CUSTOMER IS RESPONSIBLE FOR DETERMINING THAT BALDOR'S PRODUCT WILL PERFORM SUITABLY IN THE INTENDED APPLICATION.

REV. DESC: ADD 706310-63G C/BOX TO C250 AND C280 FRAMES		
REV. LTR: A	VERSION: 01	TDR: 000000816512
FILE: \RGG\00021\153		REVISED: 03:09:09 09/06/2013
MTL: –		BY: RGGWT

BALDOR

DIMENSION SHEET

SH 1 of 1

609959-001

406770-001

CONNECTION DIAGRAM
D-C MOTOR - STAB. SHUNT

406770-001

ARMATURE AND FIELD EXTERNAL CONNECTIONS
WARNING- SEE NOTE 8 FOR GROUNDING INSTRUCTIONS

ROTATION FACING COMMUTATOR END

1. CAUTION — ARMATURE AND SERIES FIELD MAY HAVE MULTIPLE LEADS. CONNECT ALL LUGS WITH THE SAME MARKING TOGETHER.
2. OPTIONAL SERIES FIELD IS MARKED S3 AND S4. FOR CUMULATIVE SERIES FIELD, CONNECT S3 TO S2 AND CONNECT S4 TO NEGATIVE. FOR DIFFERENTIAL SERIES FIELD CONNECT S4 TO S2 AND S3 TO NEGATIVE.
3. OPTIONAL CONTROL SIGNAL LEAD IS MARKED AX2. ALWAYS TAKE INTERPOLE DROP BETWEEN A2 AND AX2. NOTE: NEMA DESIGNATION FOR AX2 IS LETTER C.
4. SPACE HEATERS, WHEN PROVIDED, WILL HAVE LEADS MARKED H1 AND H2, H3, H4, ETC.
5. THERMAL PROTECTOR, WHEN PROVIDED, WILL HAVE LEADS MARKED P1 AND P2, P3, P4, ETC.
6. WINDING RTD'S, WHEN PROVIDED, WILL HAVE LEADS MARKED TD1, TD2, &TD3
7. BRUSH WEAR SENSOR, WHEN PROVIDED, WILL HAVE LEAD MARKED W1.
8. WARNING — MOTOR MUST BE GROUNDED TO PREVENT SERIOUS INJURIES TO PERSONNEL. GROUND THE MOTOR PER IEC, NATIONAL ELECTRICAL CODE AND ANY APPLICABLE LOCAL ELECTRICAL CODES. A TAPPED HOLE IS PROVIDED IN THE CONDUIT BOX, ON THE FOOT. FRAME BRACE OR OPPOSITE DRIVE END BRACKET, ADJACENT TO THE TERMINAL BOX FOR MOTOR GROUNDING. GROUND LEAD, WHEN PROVIDED, WILL BE GREEN.

CUSTOMER _____ CUSTOMER
ORDER NO. _____ RELIANCE
S.O. NO. _____

REV. DESC: DELETED DUPLICATE WORDS FROM NOTE 8		
REV. LTR: A	VERSION: 01	TDR: 000000970330
FILE: \RSN\00026\422	REVISED: 10:19:12 03/11/2016	BY: RAGTBM
MTL: -		

BALDOR

D-C MOTOR CONNECTION DIAGRAM STAB. SHUNT

SH 1 of 1