ABB BALDOR RELIANCE

Customer information packet

D2015P

15HP, 1750/2300RPM, DC, 258AT, DPFG, F1

Copyright © All product information within this document is subject to ABB Motors and Mechanical Inc. copyright © protection, unless otherwise noted.
11/29/2026 7:37:14 AM

Specifications

Armature Voltage	240 V
Base Speed	1750 rpm
Enclosure	DPFG
Field Voltage	150 V
	300 V
Output Power	15.000 HP
Agency Approvals	CSA
Ambient Temperature	40 °C
Armature Current	55.0 a
Drip Cover	No Drip Cover
Duty Rating	CONT
Feedback Device	NO FEEDBACK
Field Winding Type	STR. SHUNT
Heater Indicator	No Heater
Insulation Class	F
Lifting Lugs	Standard Lifting Lugs
Motor Standards	NEMA
Mounting Arrangement	F1
Overall Length	29.84 IN
Service Factor	1.00
Shaft Diameter	1.624 IN
Shaft Ground Indicator	No Shaft Grounding
Shaft Slinger Indicator	No Slinger
Thermal Device - Bearing	None

Part Detail

Revision	A
Type	DC
Mech. spec.	
Base	
Status	PRD/A
Elec. spec.	K0035A A
Layout	876-1
Eff. date	02-26-2020
CD Diagram	15209
Poles	00
Leads	
Proprietary	False
Created date	12-12-2019

Nameplate

NP1734									
CAT.NO.	D2015P			**MODEL**	T25S8002				
HP	15	**RPM**	1750/2300		**FRAME**	0258AT			
ARM V	240	**ARM A**	55.00		**WOUND**	STR. SHUNT			
FLD V	150/300	**FLD A**	2.60-1.60/1.30-.80						
CONN		**OHMS**			**CL**	F			
ENCL	DPFG	**DUTY**	CONT		**MX AMB**	40			
P CODE	D	**CTSR**			**SER.F.**	1.0			
S/N				**E/S**	K0035A A				
	-								
O.D.E. BRG.	6207	**D.E. BRG.**	6209		**BRUSH**	150986-25-1	**QTY**	4	

Accessories

Part number	Description	Multiplier
92EP5000A01	C-FACE CONVERSION KIT FOR STOCK MTR,FR 2	

876-1

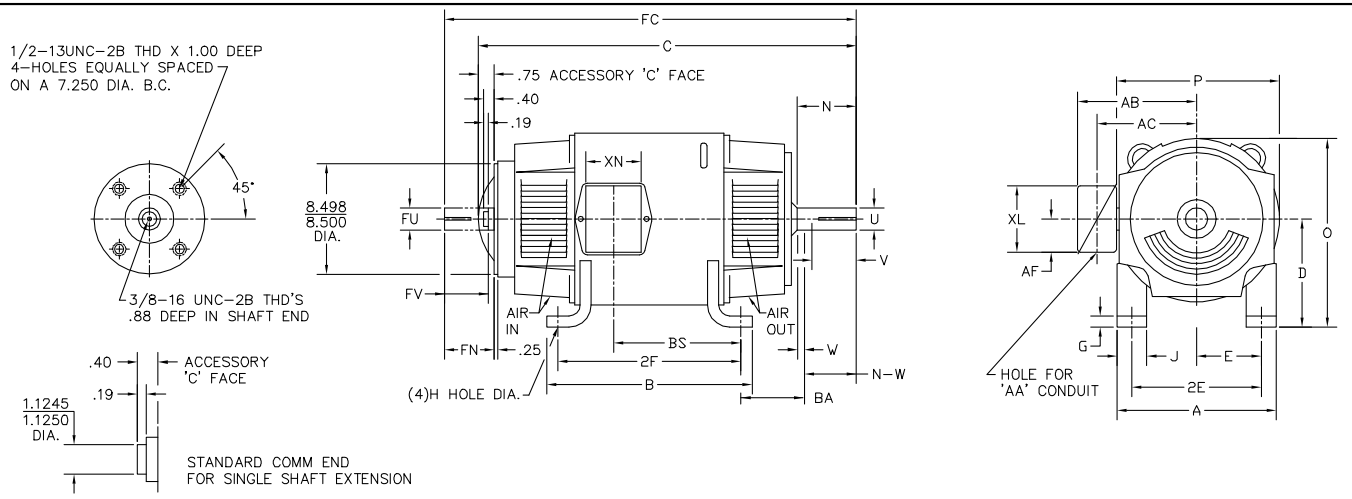

	FOOT MOUNTING						D.E. SHAFT EXTENSION					DRIVE KEY		ACC SHAFT			ACC KEY		FRAME						
FRAME	BA	E	2F	G	H	J	N	N-W	U	V	W	KEY-SQ.	KEY-LONG	FN	FU	FV	KEY-SQ.	KEY-LONG	A	B	C	FC	D	O	P
218AT	3.50	4.25	10.00	.50	.406	2.00	3.00	2.75	1.375	2.50 [3]	.25	.312	1.75	2.44	1.125	2.19	.250	2.25	10.38	11.00	24.25	25.93	5.25 [2]	10.47	10.44
219AT	3.50	4.25	11.00	.50	.406	2.00	3.00	2.75	1.375	2.50 [3]	.25	.312	1.75	2.44	1.125	2.19	.250	2.25	10.38	12.00	25.25	26.93	5.25 [2]	10.47	10.44
2110AT	3.50	4.25	12.50	.50	.406	2.00	3.00	2.75	1.375	2.50 [3]	.25	.312	1.75	2.44	1.125	2.19	.250	2.25	10.38	13.50	26.75	28.43	5.25 [2]	10.47	10.44
258AT	4.25	5.00	12.50	.69	.531	2.25	3.44	3.25	1.625	3.00 [3]	.19	.375	2.31	3.33	1.375	3.08	.312	3.00	12.38	14.00	27.25	29.84	6.25 [2]	12.47	12.44
259AT	4.25	5.00	14.00	.69	.531	2.25	3.44	3.25	1.625	3.00 [3]	.19	.375	2.31	3.33	1.375	3.08	.312	3.00	12.38	15.50	28.75	31.34	6.25 [2]	12.47	12.44
2510AT	4.25	5.00	16.00	.69	.531	2.25	3.44	3.25	1.625	3.00 [3]	.19	.375	2.31	3.33	1.375	3.08	.312	3.00	12.38	17.56	30.75	33.34	6.25 [2]	12.47	12.44
2513AT	4.25	5.00	22.00	.69	.531	2.25	3.44	3.25	1.625	3.00 [3]	.19	.375	2.31	3.33	1.375	3.08	.312	3.00	12.38	23.50	36.75	39.34	6.25 [2]	12.47	12.44

	CONDUIT BOX							ARM APPROX. WK^2 LBS.FT.^{2}	APPROXIMATE WEIGHT
FRAME	AA	AB	AC	AF	BS	XL	XN		
218AT	3/4-1	7.91	6.44	2.44	8.38	3.81	3.12	1.35	242 [5]
219AT	3/4-1	7.91	6.44	2.44	9.38	3.81	3.12	1.49	260 [5]
2110AT	3/4-1	7.91	6.44	2.44	10.88	3.81	3.12	1.71	286 [5]
258AT	1 1/4	9.35	7.72	2.94	9.75	4.94	4.00	2.91	366 [5]
259AT	1 1/4	9.35	7.72	2.94	11.25	4.94	4.00	3.31	411 [5]
2510AT	1 1/4	9.35	7.72	2.94	13.25	4.94	4.00	3.80	471 [5]
2513AT	1 1/4	9.35	7.72	2.94	19.25	4.94	4.00	5.27	532 [5]

1) SHAFT DIAMETERS TO 1.500 TOLERANCE +.0000 -.0005
SHAFT DIAMETERS ABOVE 1.500 TOLERANCE +.0000 -.0010
SHAFT DIAMETERS TO 1.625 RUNOUT .002 T.I.R. MAX.
SHAFT DIAMETERS ABOVE 1.625 RUNOUT .003 T.I.R. MAX.
2) 'D' DIMENSION TOLERANCE +.000 - .060
3) 'V' DIMENSION IS MAX. HUB LENGTH ON SHAFT
4) CONDUIT BOX CAN BE ROTATED IN 90° STEPS ON ITS OWN AXIS.
5) TOTAL WEIGHT OF MOTOR.
6) ALL DIMENSIONS NOT NOTED ARE NOMINAL DIMENSIONS CONSULT FACTORY FOR TOLERANCES.

FOR F1 OR F2 CONDUIT BOX LOCATION SEE SALES ORDER

876-1

CUSTOMER IS RESPONSIBLE FOR DETERMINING THAT BALDOR'S PRODUCT WILL PERFORM SUITABLY IN THE INTENDED APPLICATION.

REV. DESC: REV. "D" DIM TO +.000 -.060 ONLY		BALDOR
REV. LTR: B	VERSION: 01	TDR: 000000752566
FILE: \RGG\00019\505	REVISED: 09:35:03 06/20/2012	BY: RGGNAS
MTL: -		DIM SHEET,218AT-2513AT,DPFG,STD
		SH 1 of 1

15209

ALUMINUM (MATT) BACKGROUND WITH BLACK LETTERS

LABEL MANUFACTURER IDENTIFYING MARK TO APPEAR HERE

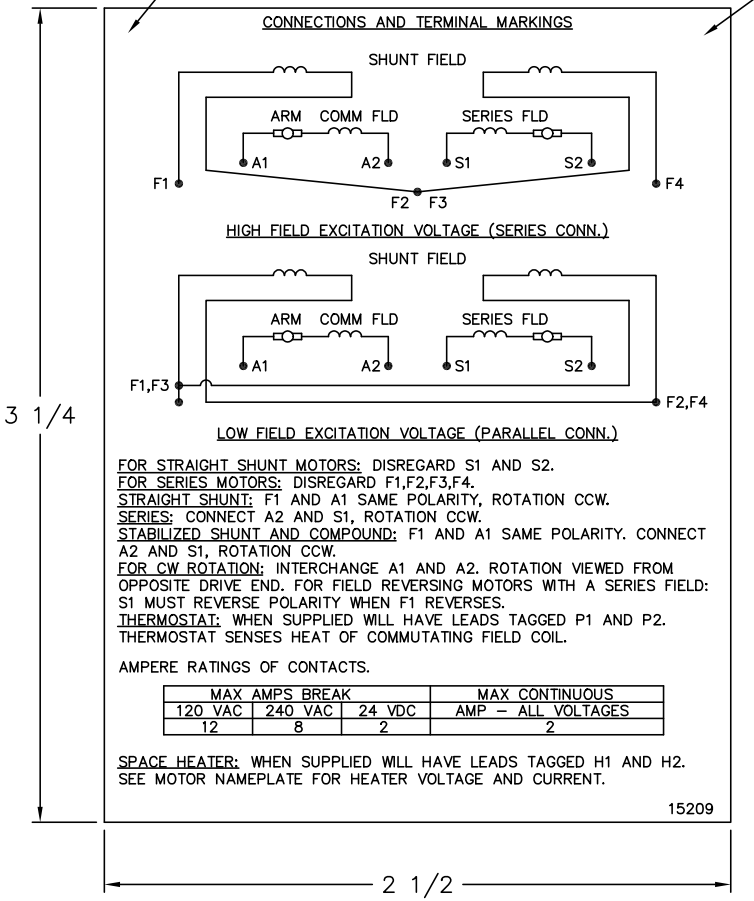

NOTE:
MATERIAL .005 MINUMUM FULL HARD ALUMINUM DULL FINISH.
TEMP. RANGE −20°C TO +125°C MAXIMUM.
FOR INDOOR AND OUTDOOR MOUNTING BACK.
METAL, PRESSURE SENSITIVE BACK.
MUST MEET CSA STANDARD.
THE CSA INDENTIFYING MARK OF THE LABEL MANUFACTURER MUST APPEAR IN THE UPPER RIGHT HAND CORNER AS INDICATED.

UNLESS OTHERWISE SPECIFIED,
BREAK ALL SHARP EDGES .010/.020.
REMOVE ALL BURRS.

TOLERANCES

.X ±.015	FRACTIONS ±1/32
.XX ±.010	RADII ±1/16
.XXX +.005	ANGLES ±1°

MATL: NOTED				BALDOR ELECTRIC Co.
REV:	G	CHANGE ALL "NAMEPLATE" TEXT TO "LABEL"		
15209	SCALE: –	BY: BKW	REVISED: 02/19/97	LABEL, CONNECTIONS AND TERMINAL MARKINGS DC
	FILE: CHB00002485		TDR: 0115147	

15209