ABB BALDOR RELIANCE

Customer information packet

D2005P

5HP, 1750RPM, 240V, DKPG, L186AT

Copyright © All product information within this document is subject to ABB Motors and Mechanical Inc. copyright © protection, unless otherwise noted.
11/26/2026 4:55:01 AM

Specifications

Armature Voltage	240 V
Base Speed	1750 rpm
Enclosure	DPFG
Field Voltage	150 V
	300 V
Output Power	5.000 HP
Agency Approvals	CSA
Ambient Temperature	40 °C
Armature Current	17.7 a
Drip Cover	No Drip Cover
Duty Rating	CONT
Feedback Device	NO FEEDBACK
Field Winding Type	STR. SHUNT
Heater Indicator	No Heater
Insulation Class	F
Lifting Lugs	Standard Lifting Lugs
Motor Standards	NEMA
Mounting Arrangement	F3
Overall Length	20.87 IN
Service Factor	1.00
Shaft Diameter	1.125 IN
Shaft Ground Indicator	No Shaft Grounding
Shaft Slinger Indicator	No Slinger
Thermal Device - Bearing	None

Part Detail

Revision	-
Type	DC
Mech. spec.	
Base	
Status	PRD/A
Elec. spec.	K0007A A
Layout	875
Eff. date	12-27-2019
CD Diagram	15209
Poles	00
Leads	
Proprietary	False
Created date	12-26-2019

Nameplate

NP1734											
CAT.NO.	D2005P			**MODEL**	T18S8005						
HP	5	**RPM**	1750/2300		**FRAME**	L 0186AT					
ARM V	240	**ARM A**	17.70		**WOUND**	STR. SHUNT					
FLD V	150/300	**FLD A**	.74-.36/.37-.18								
CONN		**OHMS**	555.		**CL**	F					
ENCL	DPFG	**DUTY**	CONT		**MX AMB**	40					
P CODE	D	**CTSR**			**SER.F.**	1.0					
S/N				**E/S**	K0007A A						
	-										
O.D.E. BRG.	6205	**D.E. BRG.**	6206		**BRUSH**	18044-4			**QTY**	2	

Accessories

Part number	Description	Multiplier
90EP5000A02	C-FACE CONVERSION KIT FOR STOCK MTR,FR 1	

CUSTOMER NAME	MODEL NO.			MTG.	REMARKS:
CUSTOMER P.O.	FRAME	R.P.M.	VOLTS	PHASE	INSUL
CERTIFIED BY DATE	H.P.	TYPE	ENCL	FREQ.	AMB.

UNITS: INCH	SCALE: NONE	PROPORTION: NONE	PART NUMBER 875	DWG.SIZE A

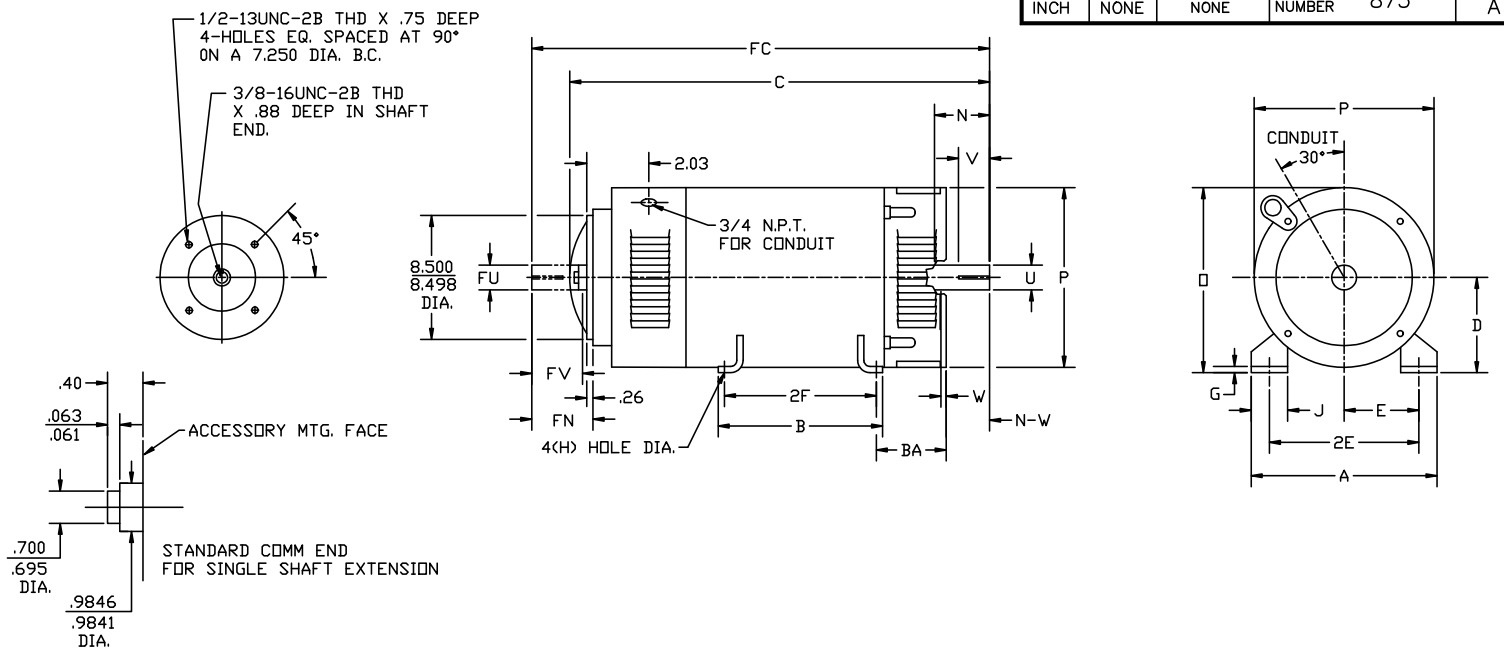

	FOOT MOUNTING						D.E. SHAFT EXTENSION					DRIVE KEY		ACC SHAFT EXTENSION			ACC KEY		FRAME							ARM APPROX. WK² LBS.FT.²	APPROXIMATE WEIGHT
FRAME	BA	E	2F	G	H	J	N	N-W	U	V	W	KEY-SQ.	KEY-LONG	FN	FU	FV	KEY-SQ.	KEY-LONG	A	B	C	FC	D	O	P		
L182AT	2.75	3.75	4.50	.38	.406	1.50	2.90	2.77	1.125	2.50 [3]	.13	.250	1.38	2.28	.875	2.03	.188	1.38	8.81	5.75	15.81	17.37	4.50 [2]	8.94	8.88	.28	84 [5]
L186AT	2.75	3.75	7.00	.38	.406	1.50	2.90	2.77	1.125	2.50 [3]	.13	.250	1.38	2.28	.875	2.03	.188	1.38	8.81	8.25	19.31	20.87	4.50 [2]	8.94	8.88	.67	159 [5]
1810AT	2.75	3.75	11.00	.38	.406	1.50	2.90	2.77	1.125	2.50 [3]	.13	.250	1.38	2.28	.875	2.03	.188	1.38	8.81	12.25	22.21	23.78	4.50 [2]	9.00	9.00	1.0	195 [5]

1) SHAFT DIAMETERS TO 1.500 TOLERANCE +.0000 −.0005
   SHAFT DIAMETERS ABOVE 1.500 TOLERANCE +.0000 −.0010
   SHAFT DIAMETERS TO 1.625 RUNOUT .002 T.I.R. MAX.
   SHAFT DIAMETERS ABOVE 1.625 RUNOUT .003 T.I.R. MAX.
2) 'D' DIMENSION TOLERANCE +.000 − .030
3) 'V' DIMENSION IS MAX. HUB LENGTH ON SHAFT
4) CONDUIT BOX CAN BE ROTATED IN 90° STEPS ON ITS OWN AXIS.
5) TOTAL WEIGHT OF MOTOR.
6) ALL DIMENSIONS NOT NOTED ARE NOMINAL DIMENSIONS CONSULT FACTORY FOR TOLERANCES.

FOR F1 OR F2 CONDUIT BOX LOCATION SEE SALES ORDER

REV.	ECO.	DESCRIPTION	BY	DATE
A	19032	REDRAWN	CSL	7-19 1991

DESIGNER CSL 7-19-91	BALDOR	
ENGINEER RFL 7-19-91	TITLE: DIMENSION SHEET DPFG, STD AT	
ENGINEER DAG 7-19-91		
MANUF. RWT 7-19-91	PART NUMBER 875	DWG.SIZE A / REV. A

15209

ALUMINUM (MATT) BACKGROUND WITH BLACK LETTERS

LABEL MANUFACTURER IDENTIFYING MARK TO APPEAR HERE

CONNECTIONS AND TERMINAL MARKINGS

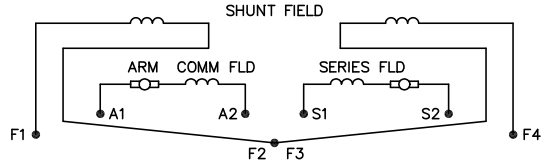

HIGH FIELD EXCITATION VOLTAGE (SERIES CONN.)

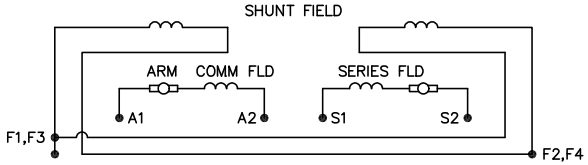

LOW FIELD EXCITATION VOLTAGE (PARALLEL CONN.)

FOR STRAIGHT SHUNT MOTORS: DISREGARD S1 AND S2.
FOR SERIES MOTORS: DISREGARD F1,F2,F3,F4.
STRAIGHT SHUNT: F1 AND A1 SAME POLARITY, ROTATION CCW.
SERIES: CONNECT A2 AND S1, ROTATION CCW.
STABILIZED SHUNT AND COMPOUND: F1 AND A1 SAME POLARITY. CONNECT A2 AND S1, ROTATION CCW.
FOR CW ROTATION: INTERCHANGE A1 AND A2. ROTATION VIEWED FROM OPPOSITE DRIVE END. FOR FIELD REVERSING MOTORS WITH A SERIES FIELD: S1 MUST REVERSE POLARITY WHEN F1 REVERSES.
THERMOSTAT: WHEN SUPPLIED WILL HAVE LEADS TAGGED P1 AND P2. THERMOSTAT SENSES HEAT OF COMMUTATING FIELD COIL.

AMPERE RATINGS OF CONTACTS.

MAX AMPS BREAK			MAX CONTINUOUS
120 VAC	240 VAC	24 VDC	AMP – ALL VOLTAGES
12	8	2	2

SPACE HEATER: WHEN SUPPLIED WILL HAVE LEADS TAGGED H1 AND H2. SEE MOTOR NAMEPLATE FOR HEATER VOLTAGE AND CURRENT.

15209

3 1/4

2 1/2

NOTE:
MATERIAL .005 MINUMUM FULL HARD ALUMINUM DULL FINISH.
TEMP. RANGE –20°C TO +125°C MAXIMUM.
FOR INDOOR AND OUTDOOR MOUNTING BACK.
METAL, PRESSURE SENSITIVE BACK.
MUST MEET CSA STANDARD.
THE CSA INDENTIFYING MARK OF THE LABEL MANUFACTURER MUST APPEAR IN THE UPPER RIGHT HAND CORNER AS INDICATED.

UNLESS OTHERWISE SPECIFIED,
BREAK ALL SHARP EDGES .010/.020.
REMOVE ALL BURRS.

TOLERANCES

.X ±.015 FRACTIONS ±1/32
.XX ±.010 RADII ±1/16
.XXX +.005 ANGLES ±1°

MATL: NOTED				
REV:	G	CHANGE ALL "NAMEPLATE" TEXT TO "LABEL"		
15209	SCALE: –	BY: BKW	REVISED: 02/19/97	
	FILE: CHB00002485		TDR: 0115147	

BALDOR ELECTRIC Co.

LABEL, CONNECTIONS AND TERMINAL MARKINGS DC

15209