07LYN006

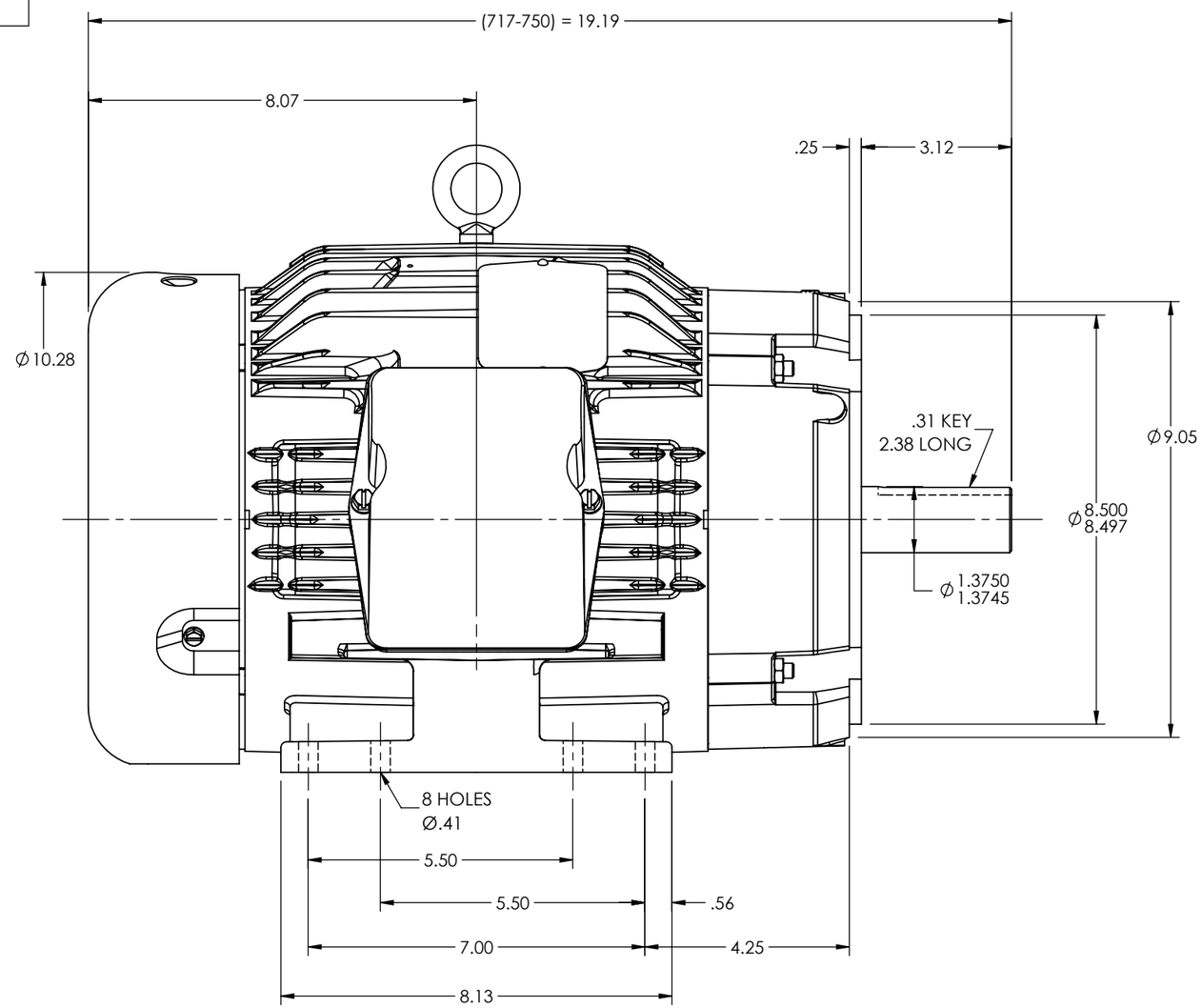

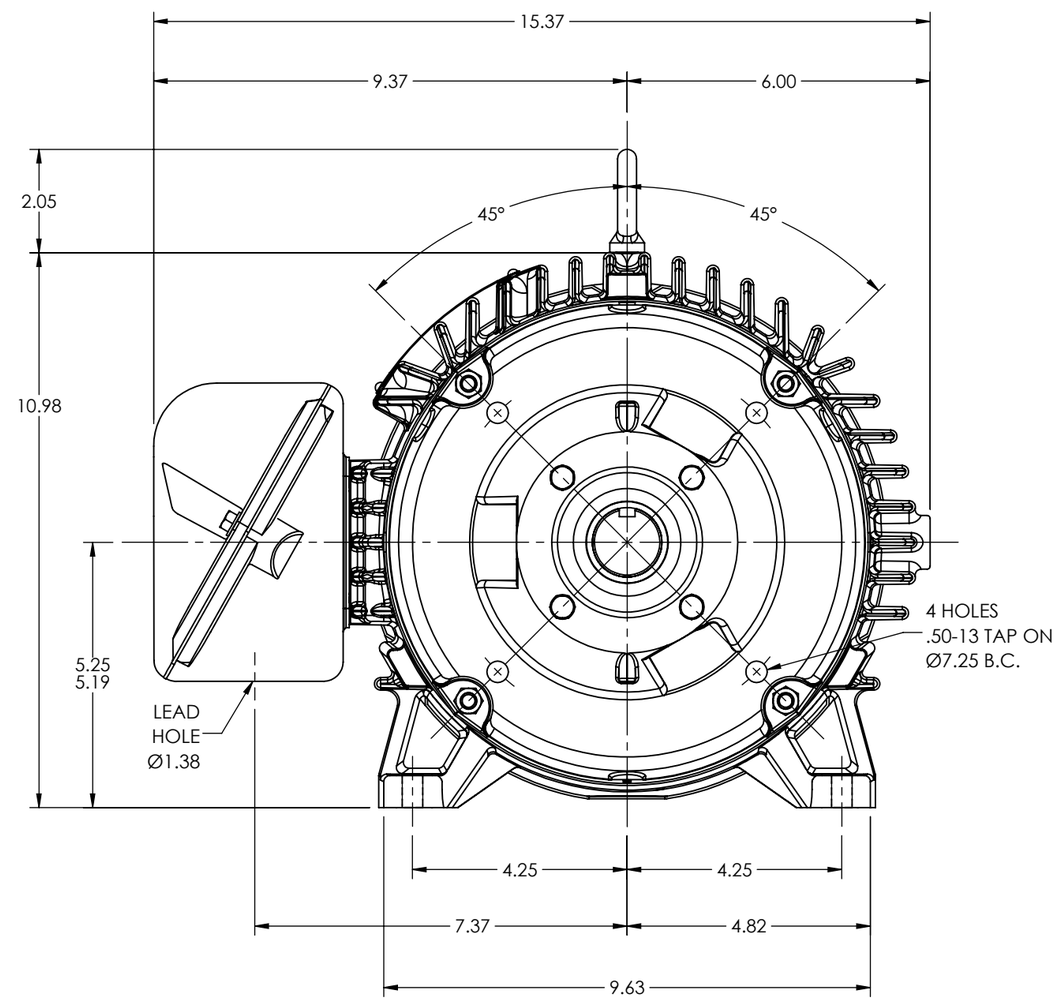

CUSTOMER IS RESPONSIBLE FOR DETERMINING THAT THE PRODUCT WILL PERFORM SUITABLY IN THE INTENDED APPLICATION

REV. DESC: CONVERT AUTOCAD DRAWING TO SWD			
REV: B	VERSION: 02	REVISED: 11:41:11 11/21/2022	TDR: 000001199231
MODEL NO. 07LYN006			REF: -
BY: ENALEM0			B

BALDOR - RELIANCE®

HORZ 213-5TC TEFC M SEALED BEARINGS

07LYN006