10LYE251

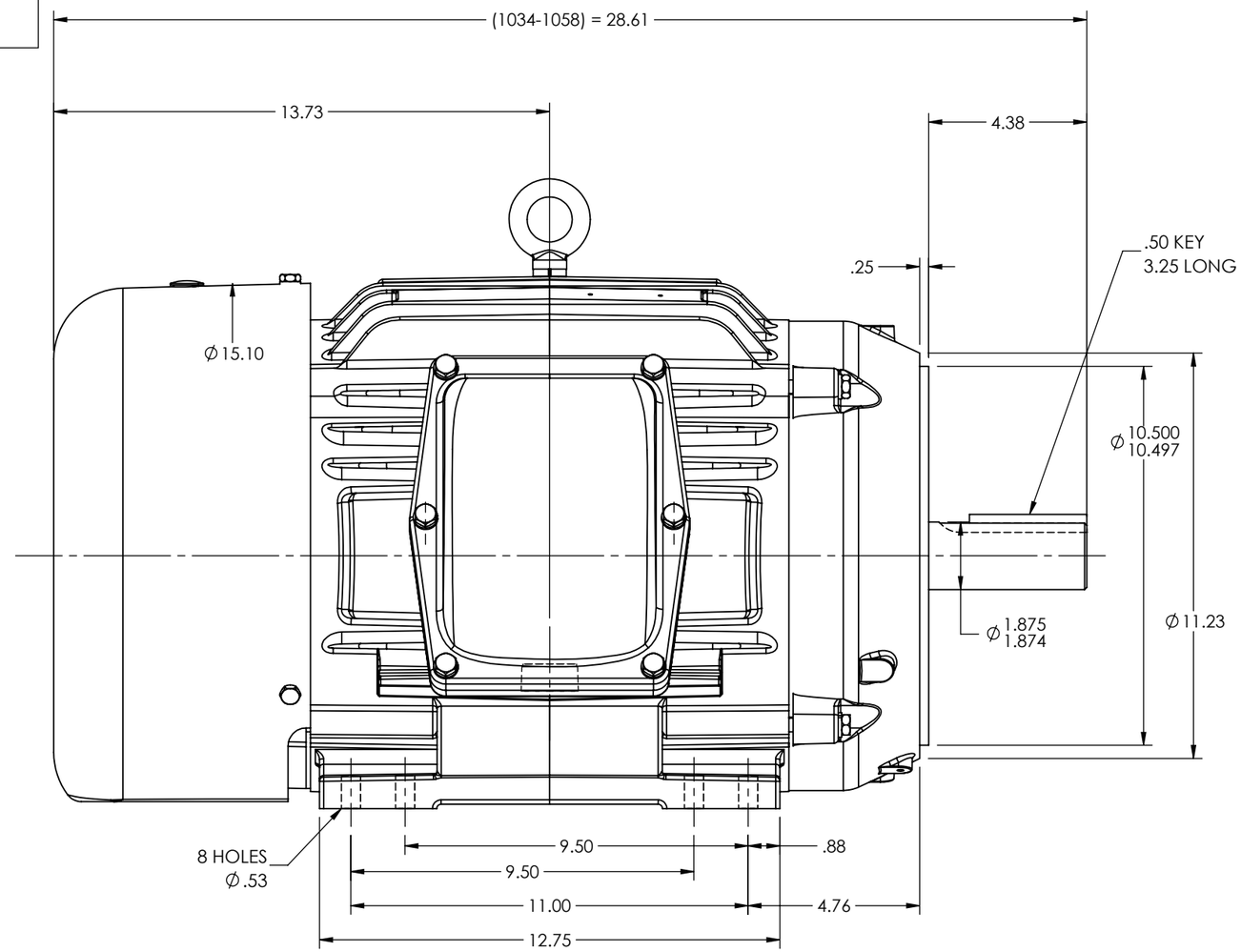

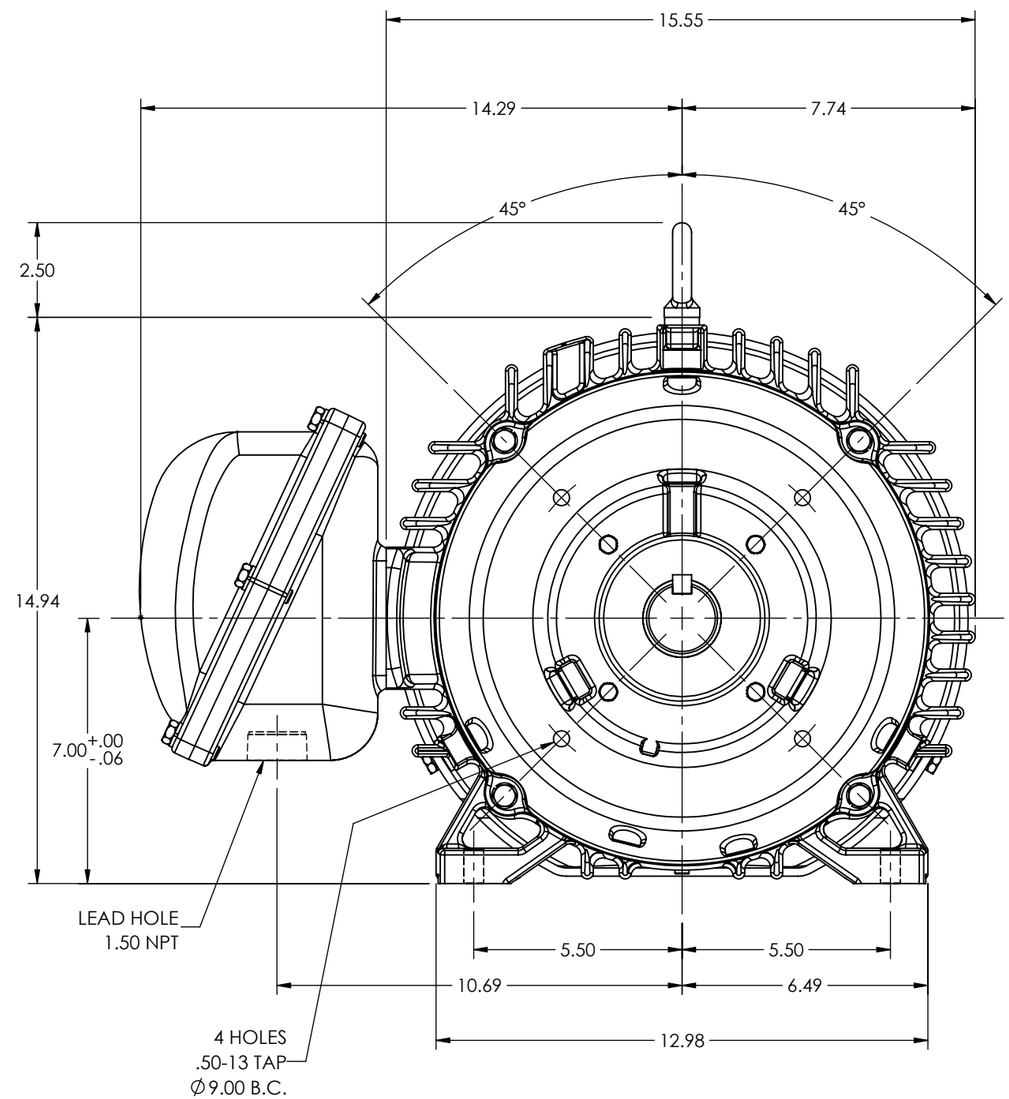

CUSTOMER IS RESPONSIBLE FOR DETERMINING THAT THE PRODUCT WILL PERFORM SUITABLY IN THE INTENDED APPLICATION

REV. DESC: CONVERT AUTOCAD DRW TO SWD			
REV: F	VERSION: 04	REVISED: 10:34:16 07/26/2023	TDR: 000001211833
MODEL NO. 10LYE251			REF: -
BY: ENALEM0			B

BALDOR - RELIANCE®

HORZ XPFC 284-6TC CL.I,GP.D;CL.II,GP.F&G

10LYE251