37LYJ054

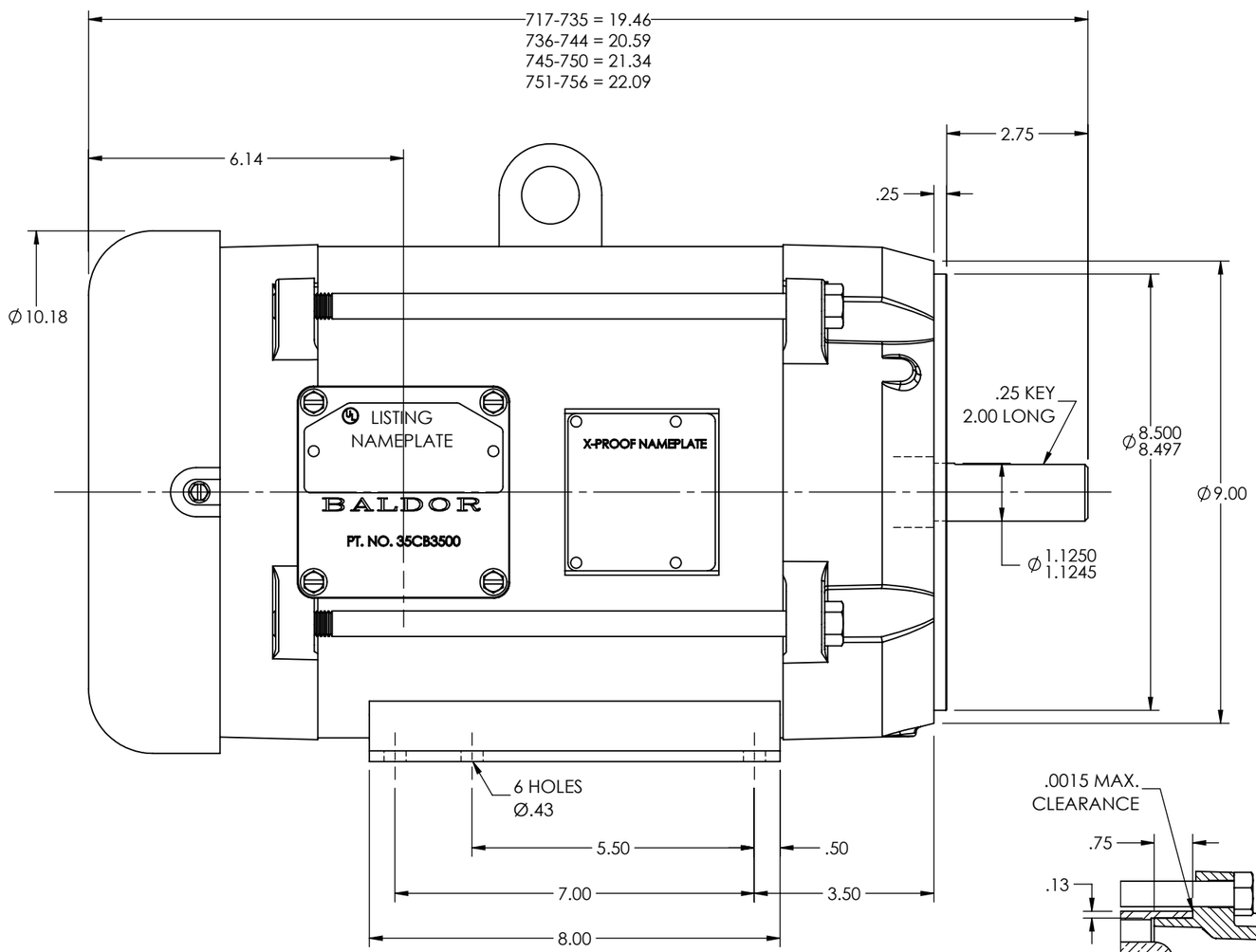

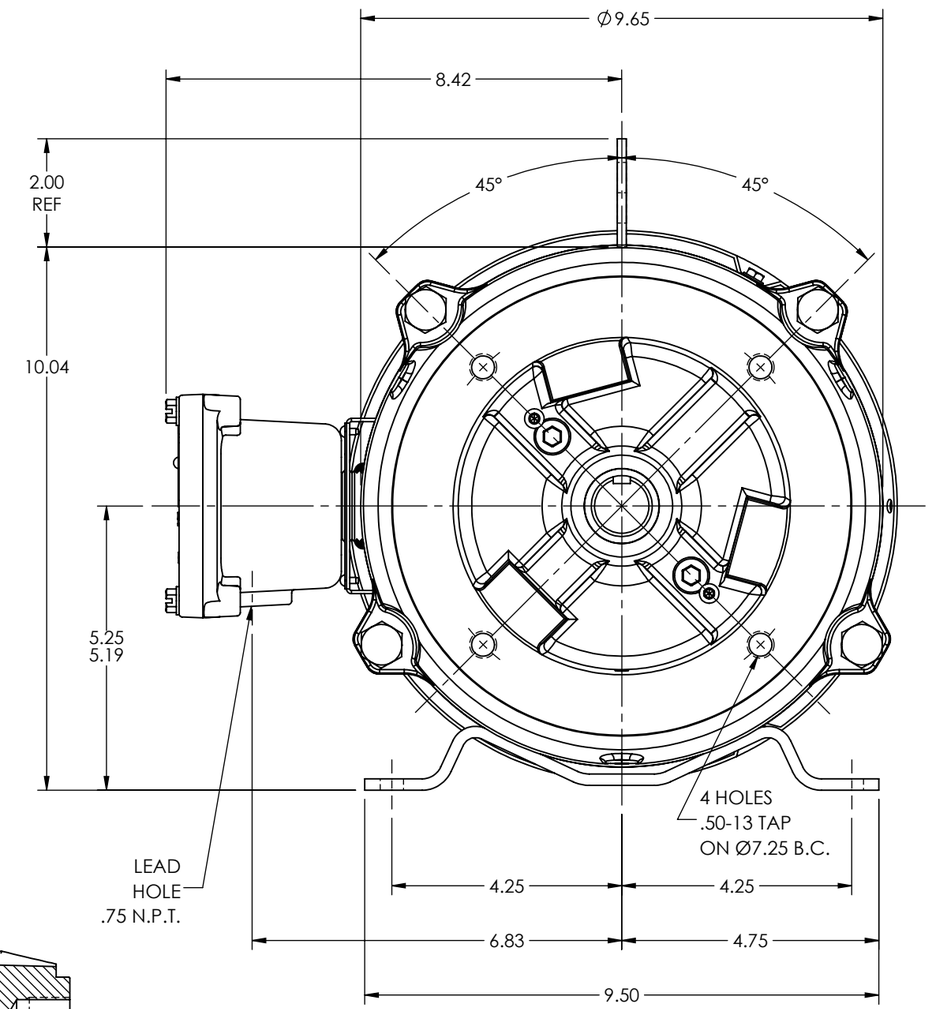

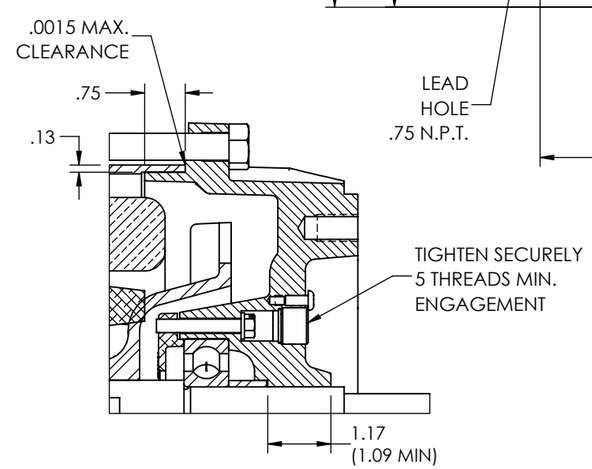

PULLEY END DETAIL

CUSTOMER IS RESPONSIBLE FOR DETERMINING THAT THE PRODUCT WILL PERFORM SUITABLY IN THE INTENDED APPLICATION

REV. DESC: CONVERSION OF ACAD TO SWD INOPC PKG 19			
REV: F	VERSION: 01	REVISED: 11:18:41 10/11/2022	TDR: 000001197758
MODEL NO. 37LYJ054			REF: -
BY: ENALEM0			B

BALDOR - RELIANCE®

STD HOR 213-5C XPFC 37L UL CL-I GP-D

37LYJ054