09LYL879

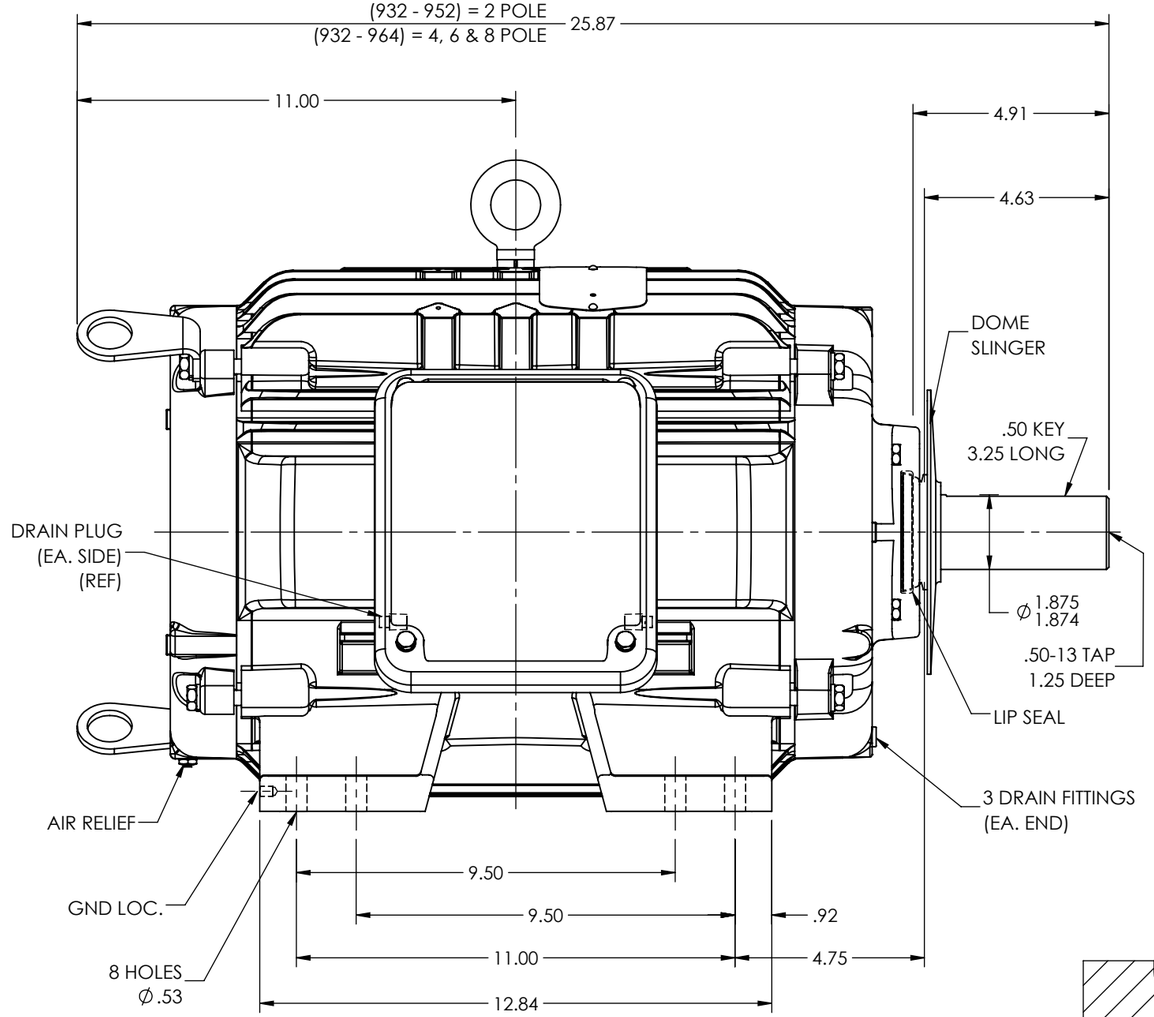

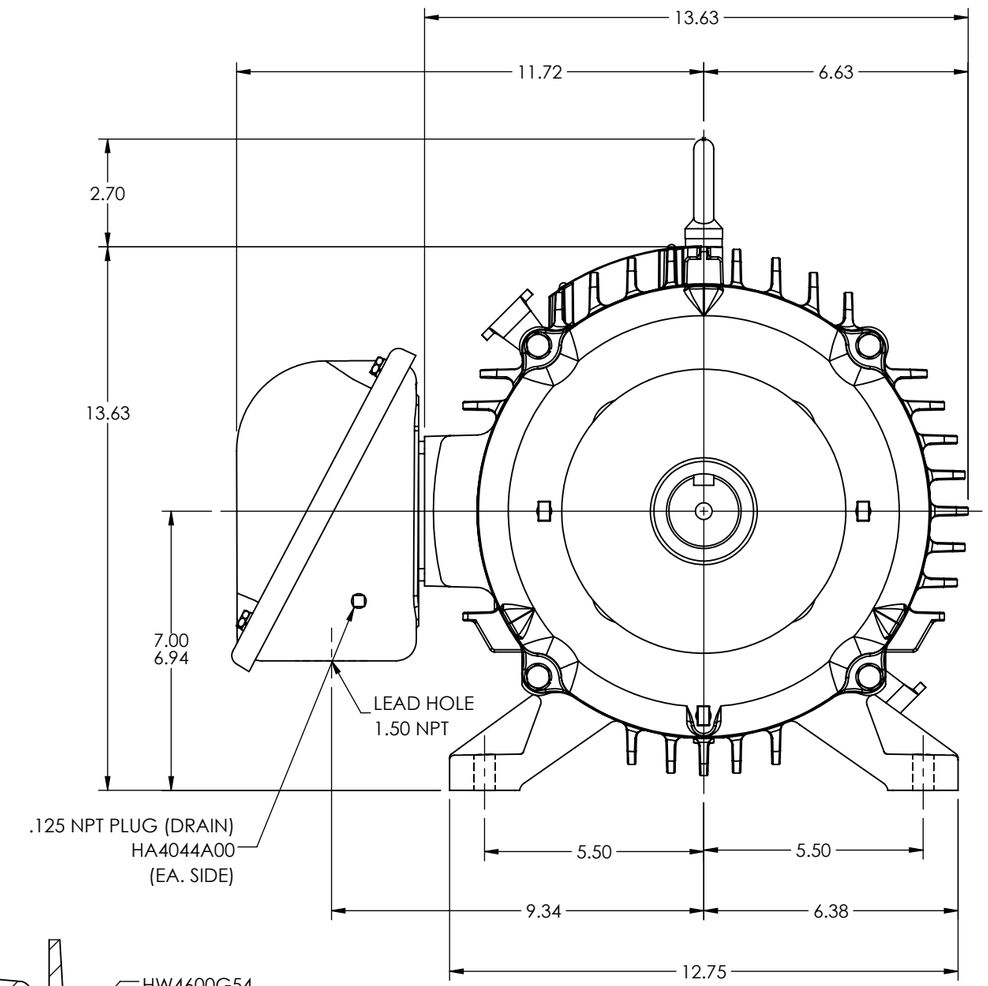

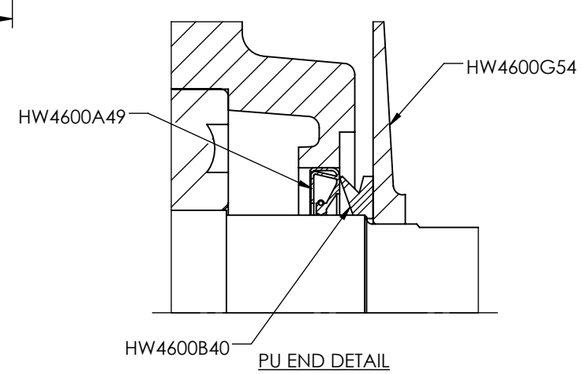

PU END DETAIL

CUSTOMER ONLY NOTE:
FOR VERTICAL SHAFT UP LIFTING,
REMOVE EYEBOLT FROM TOP OF
MOTOR AND SCREW INTO END OF SHAFT.

CUSTOMER IS RESPONSIBLE FOR DETERMINING THAT THE PRODUCT WILL PERFORM SUITABLY IN THE INTENDED APPLICATION

REV. DESC: CHGD FREP TO 09EP1100C58 & ADDED AIR RELIEF LEADER			
REV: E	VERSION: 05	REVISED: 02:28:02 07/19/2023	TDR: 000001212925
MODEL NO. 09LYL879			REF: -
BY: ENSHAB0			B

BALDOR - RELIANCE®

HOR TEAO 284-6T CP COOLING TOWER,SLD BRGS,LIP,DOME SLINGER

09LYL879