12LYF707

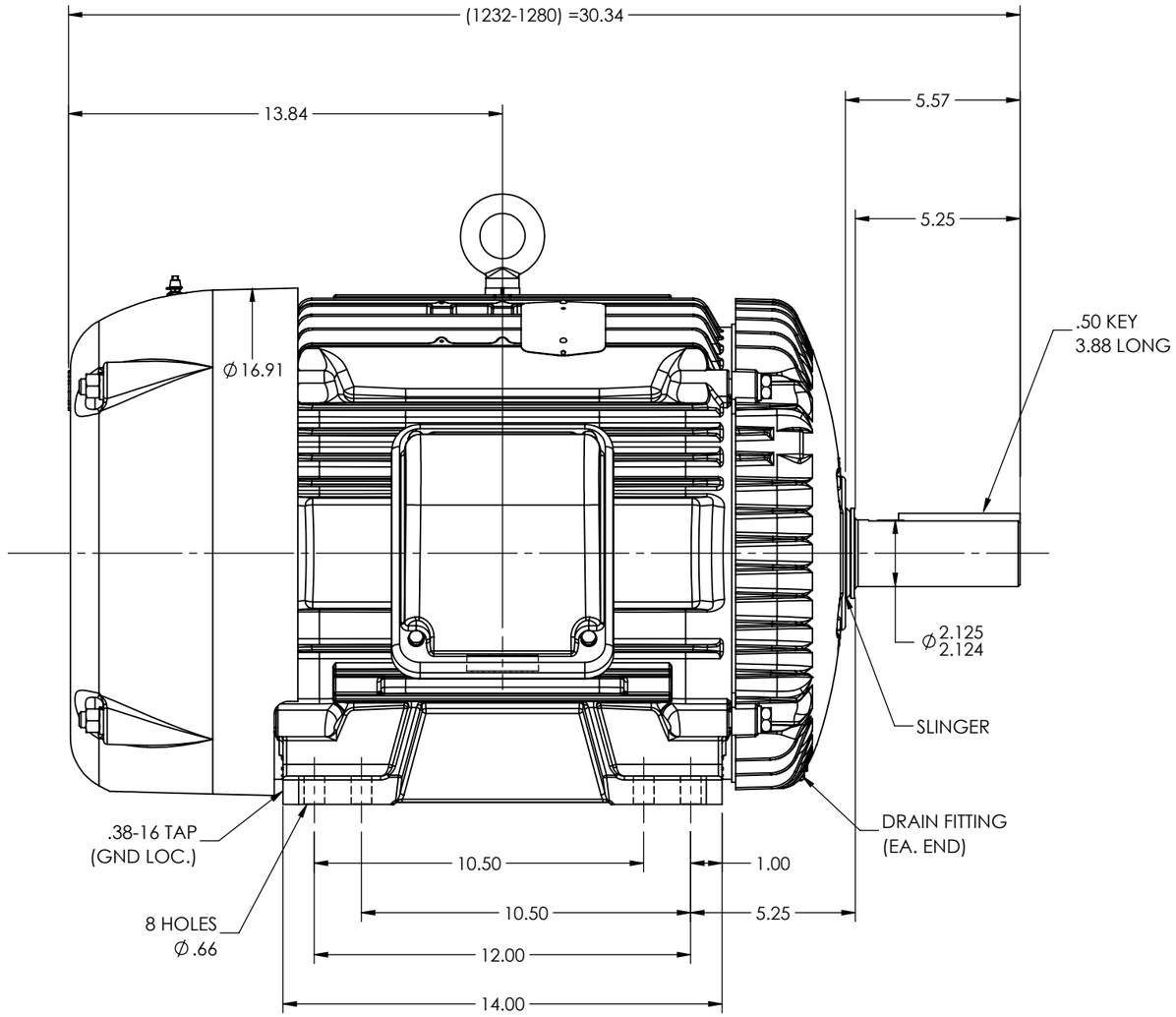

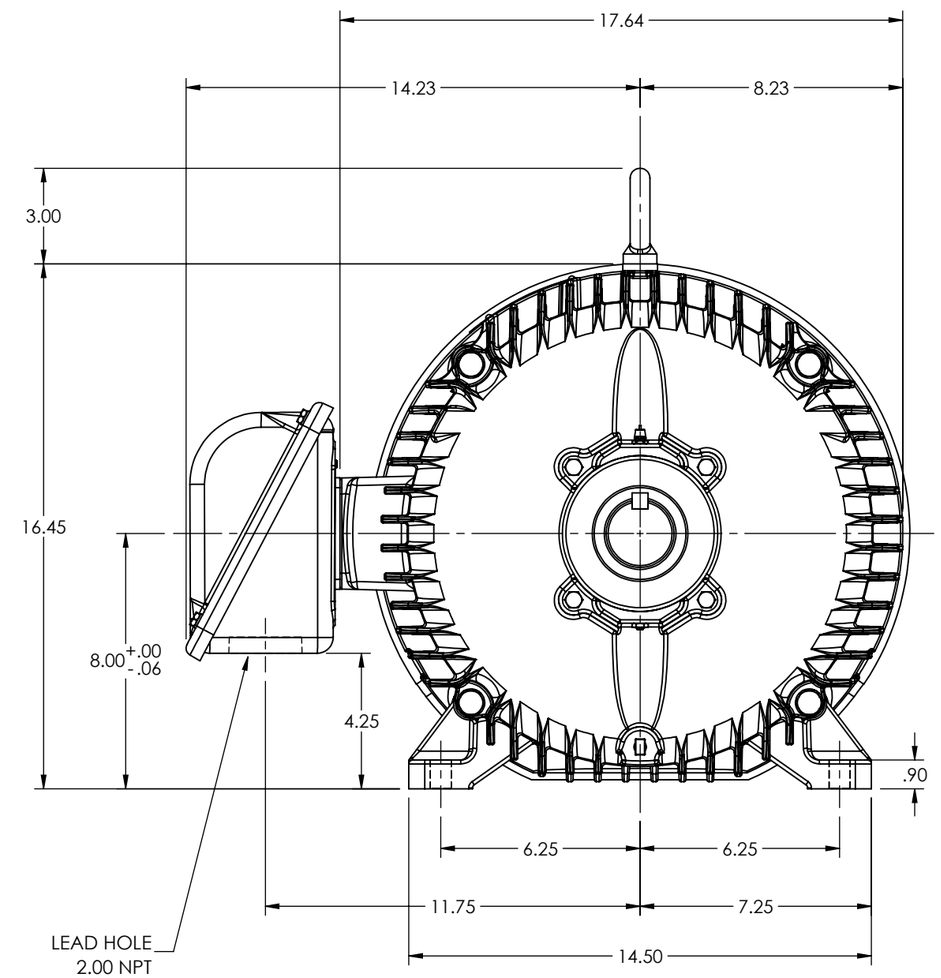

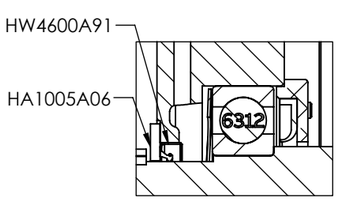

OPPOSITE DRIVE END

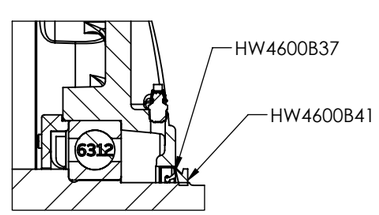

DRIVE END DETAIL

CUSTOMER IS RESPONSIBLE FOR DETERMINING THAT THE PRODUCT WILL PERFORM SUITABLY IN THE INTENDED APPLICATION

REV. DESC: CONVERT AUTOCAD TO SWD DRAWING			
REV: F	VERSION: 06	REVISED: 08:13:49 04/02/2024	TDR: 000001227248
MODEL NO. 12LYF707			REF: -
BY: USALMAZ			B

BALDOR - RELIANCE®

HOR TEFC 324-6T ECP 312 DBL SHIELD BRGS, SEALS,COOLING TOWER

12LYF707