ABB BALDOR RELIANCE

Customer information packet

CSSWDM3538-H

0.5HP, 1770RPM, 3PH, 60HZ, 56HC, 3512M, TENV, F
Class - None
Division - Not Applicable

Copyright © All product information within this document is subject to ABB Motors and Mechanical Inc. copyright © protection, unless otherwise noted.
11/27/2026 11:20:25 PM

Specifications

Enclosure	TENV
Frame	56HC
Frame Material	Stainless Steel
Frequency	60.00 Hz
Haz Area Class and Group	None
Haz Area Division	Not Applicable
Motor Letter Type	Three Phase
Output @ Frequency	.500 HP @ 60 HZ
Phase	3
Synchronous Speed @ Frequency	1800 RPM @ 60 HZ
Voltage @ Frequency	460.0 V @ 60 HZ
	208.0 V @ 60 HZ
	230.0 V @ 60 HZ
Agency Approvals	CSA
	UR
Ambient Temperature	40 °C
Auxiliary Box	NO AUXILLARY BOX
Auxiliary Box Lead Termination	None
Base Indicator	Rigid
Bearing Grease Type	Polyrex EM (-20F +300F)
Blower	None
Current @ Voltage	.900 A @ 460.0 V
	1.800 A @ 230.0 V
	1.900 A @ 208.0 V
Design Code	B
Drip Cover	No Drip Cover
Duty Rating	CONT
Efficiency @ 100% Load	80.0 %
Electrically Isolated Bearing	Not Electrically Isolated
Feedback Device	NO FEEDBACK
Heater Indicator	No Heater
High Voltage Full Load Amps	0.9 a

Part Detail

Revision	B
Type	AC
Mech. spec.	
Base	
Status	PRD/A
Elec. spec.	35WGG155
Layout	35LY-000-350
Eff. date	02-19-2024
CD Diagram	CD0005
Poles	04
Leads	9#18
Proprietary	False
Created date	10-28-2021

Insulation Class	F
Inverter Code	Inverter Ready
KVA Code	M
Lifting Lugs	No Lifting Lugs
Locked Bearing Indicator	Locked Bearing
Motor Finish	UNPAINTED
Motor Lead Termination	Flying Leads
Motor Standards	NEMA
Motor Type	3512M
Mounting Arrangement	F1
Number of Poles	4
Overall Length	11.97 IN
Power Factor	62
Product Family	Wash Down All Stainless Steel
Pulley Face Code	C-Face
Rodent Screen	None
Service Factor	1.15
Shaft Diameter	0.625 IN
Shaft Ground Indicator	No Shaft Grounding
Shaft Rotation	Reversible
Speed	1770 rpm
Speed Code	Single Speed
Starting Method	Direct on line
Thermal Device - Bearing	None
Thermal Device - Winding	None
Vibration Sensor Indicator	No Vibration Sensor
Winding Thermal 1	None
Winding Thermal 2	None

Nameplate

NP1951A01								
CAT.NO.	CSSWDM3538-H							
SPEC.	35-0000-1379							
HP	.5							
VOLTS	208-230/460							
AMP	1.9-1.8/0.9							
RPM	1770							
FRAME	56HC	**HZ**	60	**PH**	3			
SER.F.	1.15	**CODE**	M	**DES**	B	**CLASS**	F	
NEMA-NOM-EFF	80	**PF**	62					
RATING	40C AMB-CONT							
CC								
DE	6205	**ODE**	6203					
ENCL	TENV	**SN**						
	SFA 2.1-1.9/0.95							
	20:1CT 20:1VT							

AC Induction Motor Performance Data
Record # 45283
Typical performance - not guaranteed values

Winding: 35WGM303-R017	**Type:** 3516M	**Enclosure:** TENV

Nameplate Data			**460 V, 60 Hz: High Voltage Connection**	
Rated Output (HP)		.5	**Full Load Torque**	1.49 LB-FT
Volts		208-230/460	**Start Configuration**	direct on line
Full Load Amps		1.9-1.8/.9	**Breakdown Torque**	8.65 LB-FT
R.P.M.		1765	**Pull-up Torque**	4.54 LB-FT
Hz	60 **Phase**	3	**Locked-rotor Torque**	5.09 LB-FT
NEMA Design Code	B **KVA Code**	N	**Starting Current**	7.54 A
Service Factor (S.F.)		1.15	**No-load Current**	0.655 A
NEMA Nom. Eff.	84 **Power Factor**	64	**Line-line Res. @ 25ºC**	24 Ω
Rating - Duty		40C AMB-CONT	**Temp. Rise @ Rated Load**	54°C
S.F. Amps			**Temp. Rise @ S.F. Load**	61°C
			Locked-rotor Power Factor	55
			Rotor inertia	0.0946 LB-FT2

Load Characteristics 460 V, 60 Hz, 0.5 HP

% of Rated Load	**25**	**50**	**75**	**100**	**125**	**150**	**S.F.**
Power Factor	26	41	53	63	70	75	67
Efficiency	65	77.6	81.5	83.8	84	83.4	83.9
Speed	1793	1783	1774	1765	1755	1745	1759
Line amperes	0.674	0.725	0.793	0.885	0.986	1.11	0.946

ABB Motors and Mechanical Inc.

WINDING # 35WGM303

0.5 HP 3 PH 60 HZ 1765 RPM 460 V 3516M

Typical performance - not guaranteed values.

TORQUES(LB-FT): PO=8.65 PU=4.54 LR=5.09 LRA=7.54

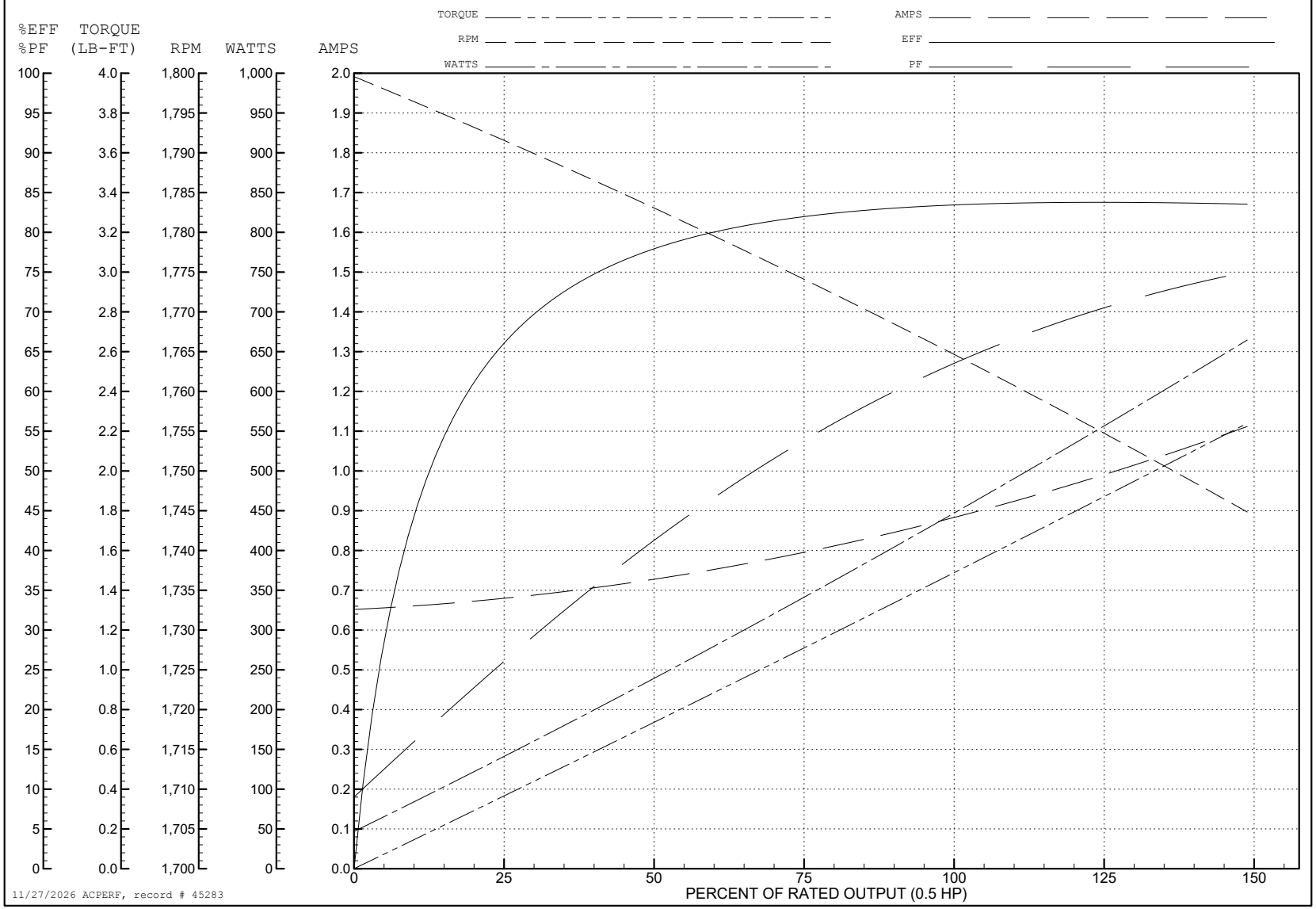

35LY-000-350

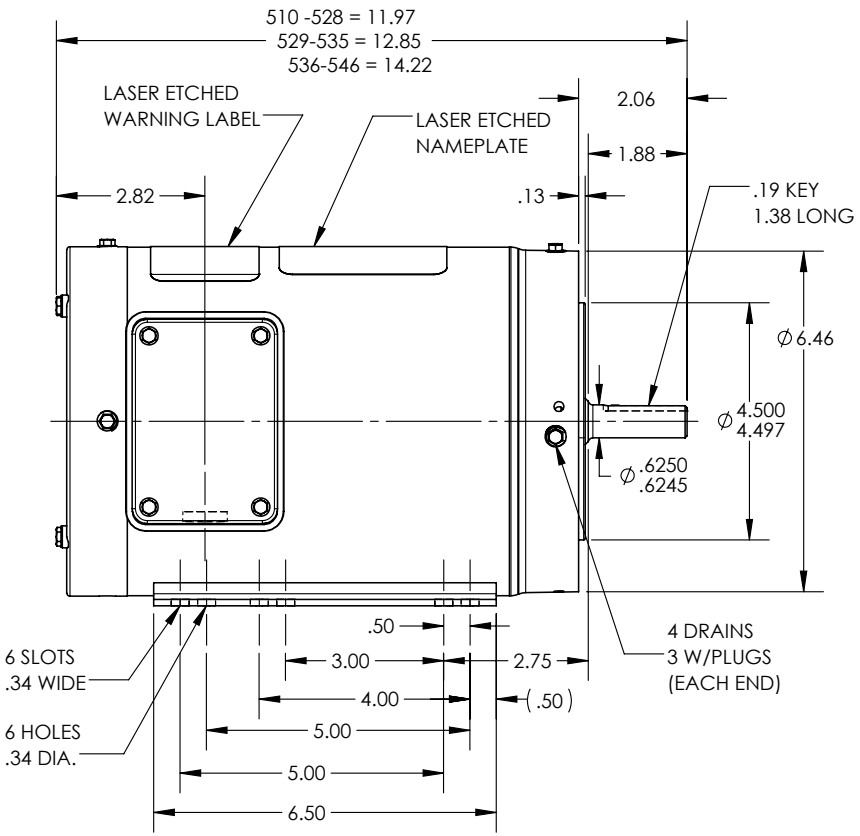

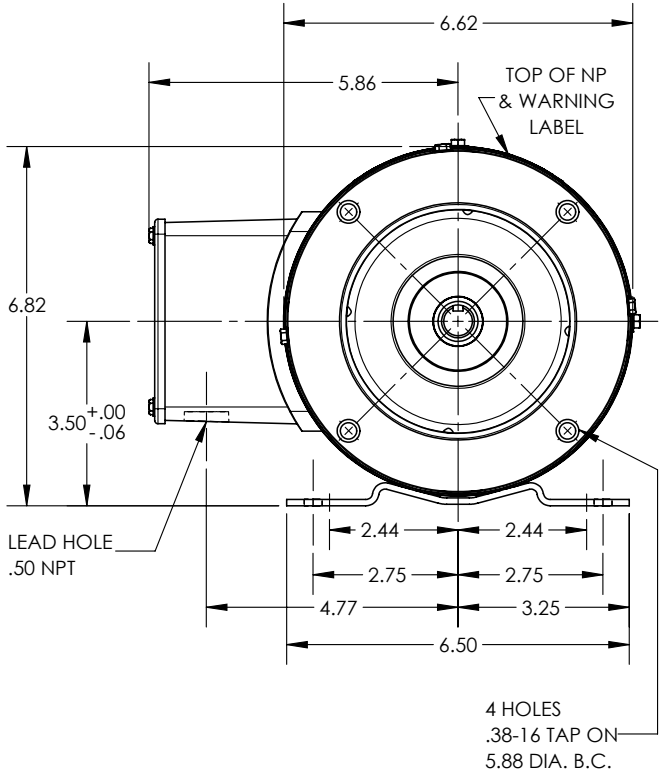

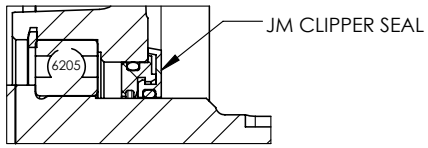

PULLEY END DETAIL

CUSTOMER IS RESPONSIBLE FOR DETERMINING THAT THE PRODUCT WILL PERFORM SUITABLY IN THE INTENDED APPLICATION

REV. DESC: NEW			
REV: -	VERSION: 00	REVISED: 09:59:04 06/01/2020	TDR: 000001125696
35LY-000-350	MODEL NO. 35LY-000-350		REF: -
	BY: ENADAF0		

BALDOR - RELIANCE®

STD HORZ 56HC TENV 35M WD4

35LY-000-350

CD0005

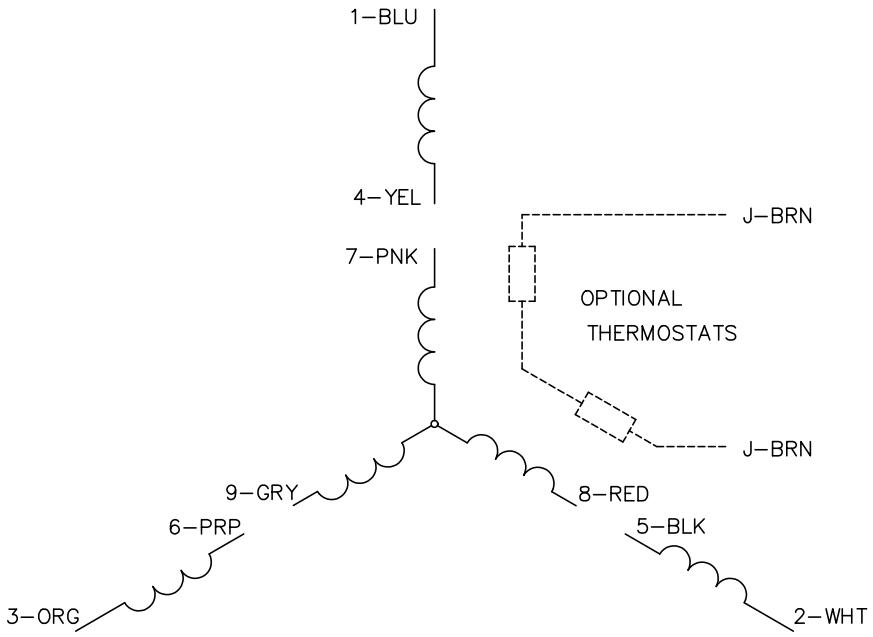

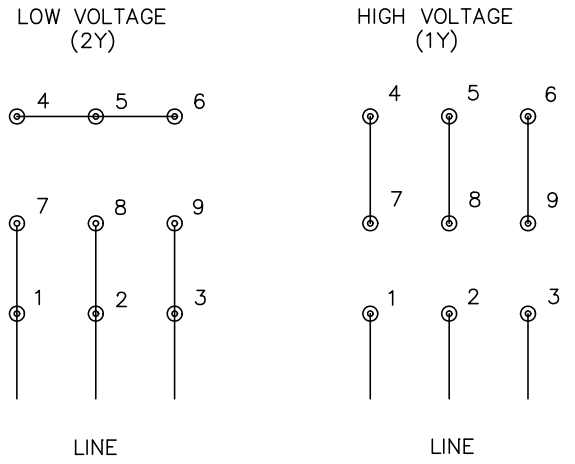

NOTES:

1. INTERCHANGE ANY TWO LINE LEADS TO REVERSE ROTATION.
2. OPTIONAL THERMOSTATS ARE PROVIDED WHEN SPECIFIED.
3. ACTUAL NUMBER OF INTERNAL PARALLEL CIRCUITS MAY BE A MULTIPLE OF THOSE SHOWN ABOVE.
4. LEAD COLORS ARE OPTIONAL. LEADS MUST ALWAYS BE NUMBERED AS SHOWN.

CD0005

REV. DESC: REVISE TO SHOW OPTIONAL COLORS			BALDOR ELECTRIC Co.
REV. LTR: E	BY: JLP	REVISED: 01/19/99 10:15	TDR: 0171435
CD0005		FILE: AAA00005140	MDL: –
		MTL: –	3PH, DV, 9 LEADS