37LYJ859

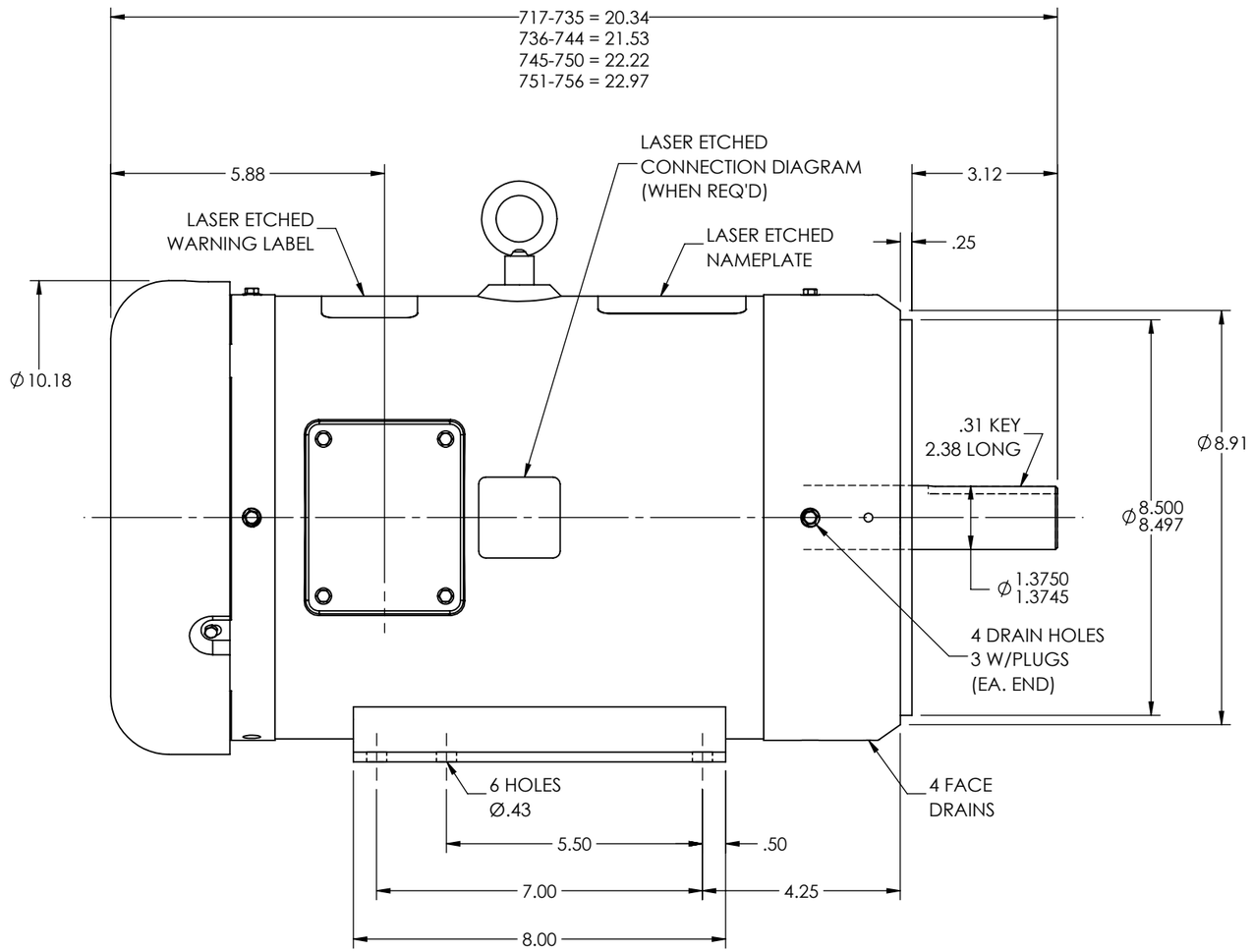

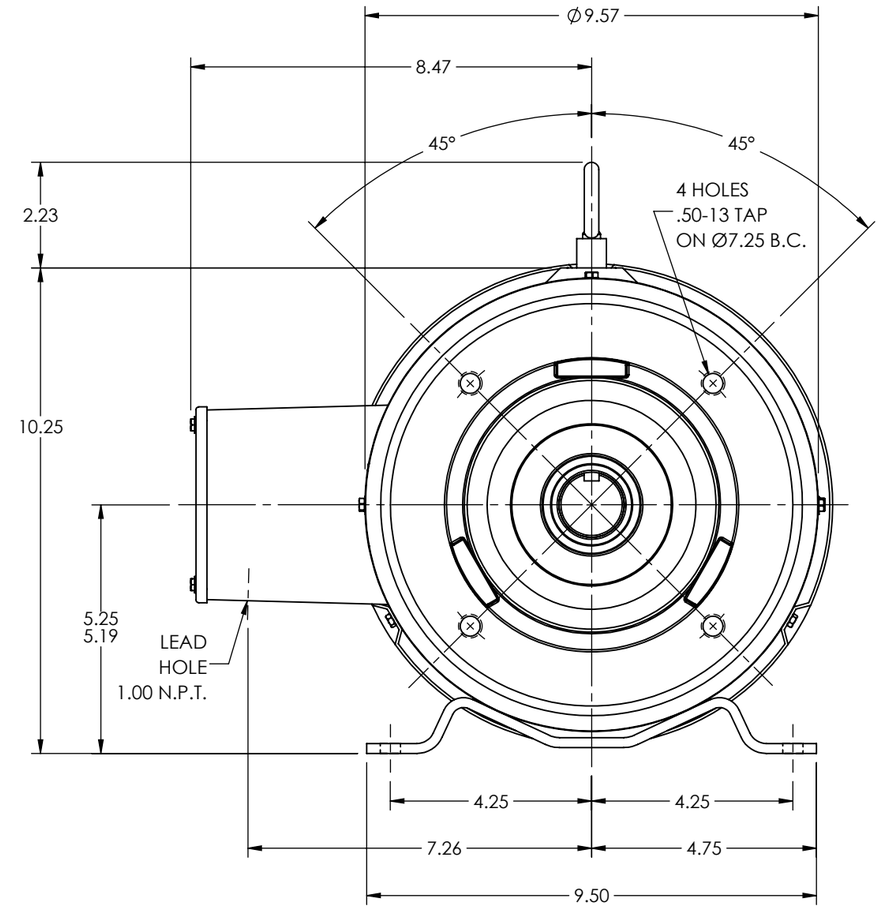

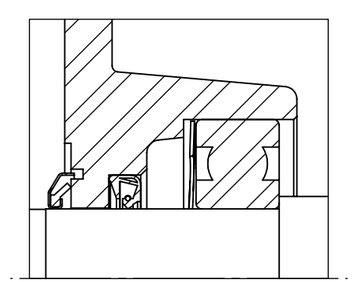

FRONT END DETAIL

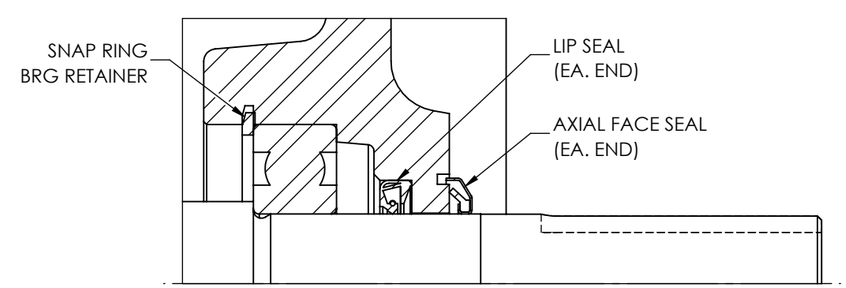

PULLEY END DETAIL

CUSTOMER IS RESPONSIBLE FOR DETERMINING THAT THE PRODUCT WILL PERFORM SUITABLY IN THE INTENDED APPLICATION

REV. DESC: CONVERSION OF ACAD TO SWD INOPC PKG 19			
REV: E	VERSION: 05	REVISED: 11:29:14 10/11/2022	TDR: 000001197758
MODEL NO. 37LYJ859			REF: -
BY: ENALEM0			B

BALDOR - RELIANCE®

STD HORZ 213-5TC TEFC 37M WD10

37LYJ859