ABB BALDOR RELIANCE

Customer information packet

CSPM4313TS

75HP, 3555RPM, 3PH, 60HZ, 365TSC, A36068M, TEF
Class - CLI GP A,B,C,D; CLII GP F,G
Division - Division II

Copyright © All product information within this document is subject to ABB Motors and Mechanical Inc. copyright © protection, unless otherwise noted.
11/27/2026 10:04:05 PM

Specifications

Enclosure	TEFC
Frame	365TSC
Frame Material	Cast Iron
Frequency	60.00 Hz
Haz Area Class and Group	CLI GP A,B,C,D; CLII GP F,G
Haz Area Division	Division II
Motor Letter Type	Three Phase
Output @ Frequency	75.000 HP @ 60 HZ
Phase	3
Synchronous Speed @ Frequency	3600 RPM @ 60 HZ
Voltage @ Frequency	230.0 V @ 60 HZ
	460.0 V @ 60 HZ
Agency Approvals	CCSAUSEEV
	CURUSEEV
	NEMA_PREMIUM
Ambient Temperature	40 °C
Auxiliary Box	NO AUXILLARY BOX
Base Indicator	Rigid
Bearing Grease Type	Polyrex EM (-20F +300F)
Current @ Voltage	161.000 A @ 230.0 V
	80.700 A @ 460.0 V
Design Code	B
Drip Cover	No Drip Cover
Duty Rating	CONT
Efficiency @ 100% Load	95.0 %
Feedback Device	NO FEEDBACK
Heater Indicator	No Heater
High Voltage Full Load Amps	80.7 a
Insulation Class	F
Inverter Code	Inverter Duty
KVA Code	G
Lifting Lugs	Standard Lifting Lugs

Part Detail

Revision	A
Type	AC
Mech. spec.	
Base	
Status	PRD/A
Elec. spec.	A36WG1545
Layout	617438-610
Eff. date	05-28-2025
CD Diagram	416820-002
Poles	02
Leads	3#2,6#4
Proprietary	False
Created date	12-10-2024

Max Speed	4200 rpm
Motor Lead Quantity/Wire Size	3 @ 2 AWG
Motor Standards	NEMA
Motor Type	A36068M
Mounting Arrangement	F1
Number of Poles	2
Overall Length	31.36 IN
Power Factor	91
Product Family	General Industrial
Pulley End Bearing Type	Ball
Pulley Face Code	C-Face
Service Factor	1.00
Shaft Diameter	1.875 IN
Shaft Ground Indicator	No Shaft Grounding
Shaft Rotation	Reversible
Shaft Slinger Indicator	Shaft Slinger
Speed	3555 rpm
Speed Code	Single Speed
Starting Method	Direct on line
Thermal Device - Bearing	None
Thermal Device - Winding	None

Nameplate

NP2496L
MOBILE POLYREX EM

NP4562L

CAT NO	CSPM4313TS	**SPEC NO.**	A36-0004-1545	**I.P.**	55										
HP	75	**AMPS**	161/80.7	**VOLTS**	230/460	**DESIGN**	B								
FRAME SIZE	365TSC	**RPM**	3555	**MAX RPM**	4200	**HZ**	60	**AMB**	40	**C**					
D.E. BRG.	65BC03J30X	**PH.3**	3	**DUTY**	CONT	**INSUL.CLASS**	F								
O.D.E. BRG.	65BC03J30X	**TYPE P**		**ENCL**	TEFC	**SF**	1.15	**CODE**	G						
POWER FACTOR	91	**MAX CORR KVAR**	5	**NEMA NOM EFFICIENCY**	95	**MOTOR WEIGHT**		**LBS**							
CL.I,DIV 2,GRP:	**A,B,C,D**	**T.CODE**	T3	**CL.1,ZONE 2,GRP:**	**IIA,IIB,IIC**	**T=**	200	**C**	**INVERTER T.CODE**	T3					
CL.II,DIV 2,GRP:	**F,G**	**T.CODE**	T3C	**CL II ZONE 22 GRPS IIIB**	**T=**	160	**C**	**INVERTER T.CODE**	T3						
ID LOGO	**INV TYPE:**	**VPWM**	**CT**	15	**TO**	60	**VT**	3	**TO**	60	**CHP**	60	**TO**	70	
ID LOGO	**1.0 SF VPWM**	**WK2**	8.642	**LBFT2**	**SL HZ**	0.75	**MAG CUR**	31/15.5							
SER.NO.		**MEETS INTENT OF IEEE-45**	**FOR WEATHER PROTECTION**												

DUTY MASTER ALTERNATING CURRENT MOTORS

617438-610

ENCLOSURE: TOTALLY ENCLOSED

MOUNTING: FOOT, F-1

SQUIRREL-CAGE INDUCTION
E364TSC/E365TSC FRAME DESIGN
TACONITE SEALS
DIV.2

COOLING: FAN COOLED

ENCLOSURE ENHANCEMENT: SEVERE DUTY

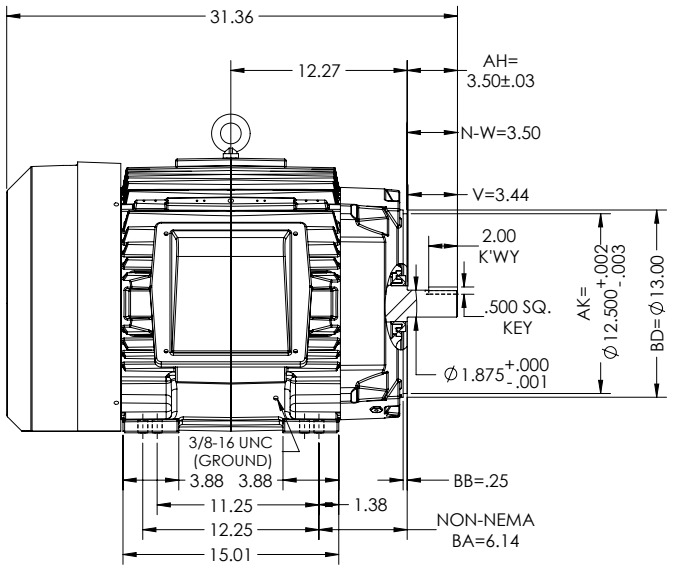

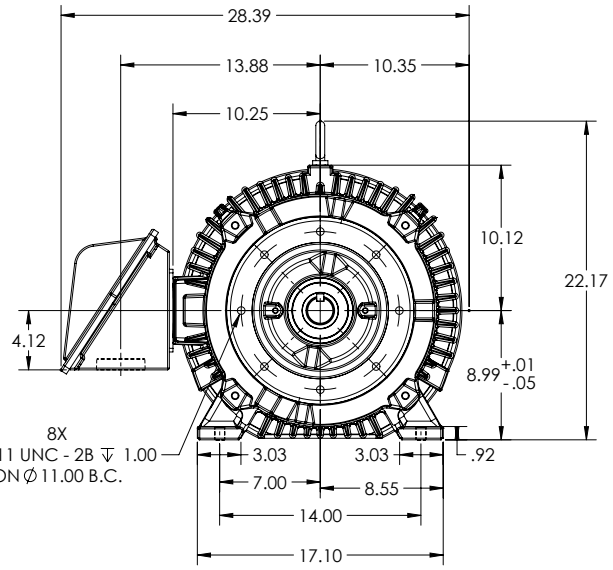

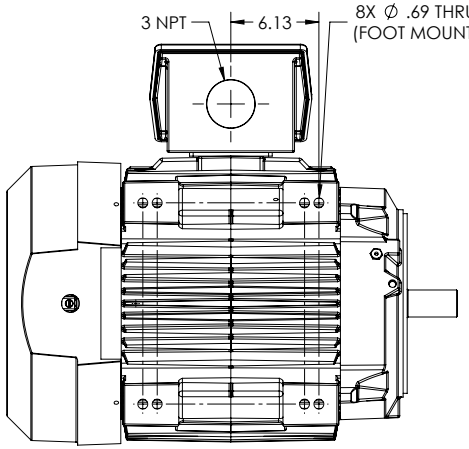

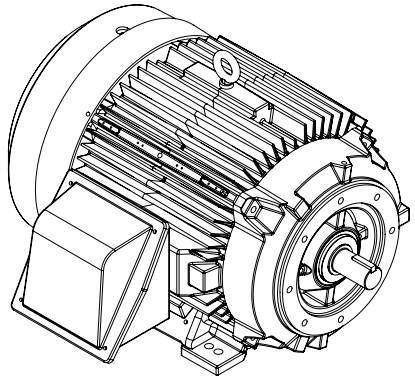

DIMENSIONS ARE IN INCHES.
WEIGHT (LBS.) 845, MAY VARY 15% DEPENDING ON RATING
CUSTOMER IS RESPONSIBLE FOR DETERMINING THAT MOTOR PERFORMANCE IS SUITABLE IN THE APPLICATION.

SHEET NUMBER
1 OF 1

617438-610

FACE RUNNOUT & ECCENTRICITY IS .007" MAX. T.I.R.
IF MOUNTING CLEARANCE DETAILS ARE REQUIRED, CONSULT FACTORY.
MAX PERMISSIBLE SHAFT RUNOUT WHEN MEASURED AT END OF STANDARD SHAFT EXTENSION IS .003" T.I.R.

REV. DESC: NEW DRAWING			
REV: -	VERSION: 00	REVISED: 01:40:20 12/13/2024	TDR: 000001239215
MODEL NO. 617438-610			
BY: USJEDIL		C	

BALDOR

E365/364TSC TEFC FOOT F1/CAST IRON BOX/TACONITE DIV. 2

617438-610

416820-002

A-C MOTOR
CONNECTION DIAGRAM
STANDARD 9 LEAD DELTA-CONNECTED

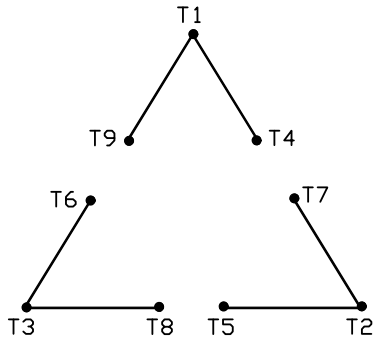

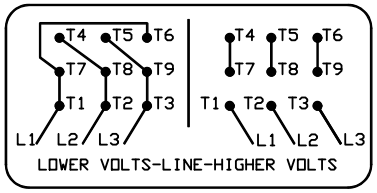

(N. P. 1575-B)

REV. DESC: ADJUST TEXT DARKNESS		
REV. LTR: B	VERSION: 02	TDR: 000001285318
FILE: \RAG\00022\453	REVISED: 09:36:26 09/24/2026	BY: USJOSUL
MTL: –		

ABB

CONN DIAG – STANDARD 9 LEAD, DELTA-CONNECTED

SH1 of 1

416820-002