ABB BALDOR RELIANCE

Customer information packet

CSPM4107TS

25HP, 3545RPM, 3PH, 60HZ, 284TSC, 1048M, TEFC
Class - CLI GP A,B,C,D CLII GP F,G
Division - Division II

Copyright © All product information within this document is subject to ABB Motors and Mechanical Inc. copyright © protection, unless otherwise noted.
11/28/2026 3:16:34 PM

Specifications

Enclosure	TEFC
Frame	284TSC
Frame Material	Cast Iron
Frequency	60.00 Hz
Haz Area Class and Group	CLI GP A,B,C,D CLII GP F,G
Haz Area Division	Division II
Motor Letter Type	Three Phase
Output @ Frequency	25.000 HP @ 60 HZ
Phase	3
Synchronous Speed @ Frequency	3600 RPM @ 60 HZ
Voltage @ Frequency	460.0 V @ 60 HZ
	230.0 V @ 60 HZ
Agency Approvals	CSA
	CURUSEEV
	NEMA_PREMIUM
	WEEE
Ambient Temperature	40 °C
Auxiliary Box	NO AUXILLARY BOX
Auxiliary Box Lead Termination	None
Base Indicator	Rigid
Bearing Grease Type	Polyrex EM (-20F +300F)
Blower	None
Current @ Voltage	28.000 A @ 460.0 V
	56.000 A @ 230.0 V
Design Code	A
Drip Cover	No Drip Cover
Duty Rating	CONT
Efficiency @ 100% Load	93.0 %
Electrically Isolated Bearing	Not Electrically Isolated
Feedback Device	NO FEEDBACK
Front Shaft Indicator	None
Haz Area Temp Code	T3A

Part Detail

Revision	D
Type	AC
Mech. spec.	10T014
Base	
Status	PRD/A
Elec. spec.	10WGZ894
Layout	10LYT014
Eff. date	04-17-2026
CD Diagram	CD0180
Poles	02
Leads	9#10
Proprietary	False
Created date	10-10-2024

Heater Indicator	No Heater
High Voltage Full Load Amps	28.0 a
Insulation Class	F
Inverter Code	Inverter Duty
KVA Code	J
Lifting Lugs	Standard Lifting Lugs
Locked Bearing Indicator	Locked Bearing
Max Speed	4500 rpm
Motor Lead Quantity/Wire Size	9 @ 10 AWG
Motor Lead Termination	Flying Leads
Motor Standards	NEMA
Motor Type	1048M
Mounting Arrangement	F1
Number of Poles	2
Overall Length	26.75 IN
Power Factor	88
Product Family	Chemical Processing (Not DC)
Pulley End Bearing Type	Ball
Pulley Face Code	C-Face
Pulley Shaft Indicator	Standard
Rodent Screen	None
Service Factor	1.15
Shaft Diameter	1.875 IN
Shaft Ground Indicator	No Shaft Grounding
Shaft Rotation	Reversible
Shaft Slinger Indicator	No Slinger
Speed	3545 rpm
Speed Code	Single Speed
Starting Method	Direct on line
Thermal Device - Bearing	None
Thermal Device - Winding	None
Vibration Sensor Indicator	No Vibration Sensor
Winding Thermal 1	None
Winding Thermal 2	None

Nameplate

NP4439B05C23L

CAT #	CSPM4107TS	**SER #**		**CC**	010A	**WGT**	396	**LBS**							
SPEC	10T014Z894	**FRAME**	284TSC	**ENCL**	TEFC	**IP**	55								
RATING	40C AMB-CONT	**NEMA NOM. EFF**	93												
HP	25	**VOLTS**	230/460												
AMPS	56/28	**RPM**	3545	**HZ**	60										
PH	3	**CL**	F	**CODE**	J	**DES**	A	**PF**	88	**%**	**SER.F.**	1.15	**SF AMP**	64/32	
DE BRG	6312	**ODE BRG**	6311	**LUBE**	POLYREX EM										
INV TYPE:	**VPWM**	**SL HZ**	1	**CHP**	60	**TO**	75	1.3:1							
WK2	2.07	**LBFT2**	**MAX RPM**	4500	**CT**	6	**TO**	60	10:1						
MAG CUR	19/9.5	**VT**	3	**TO**	60	20:1									

MEETS INTENT OF IEEE-45 **FOR WEATHER PROTECTION**

CL I DIV 2 GRPS A,B,C,D	**TEMP CODE**	T3C	**CL I INV TEMP CODE**	T3A	**TEMP=**	180	**C**				
CL I ZONE 2 GRPS	**IIA,IIB,IIC**	**TEMP =**	180	**C**	**CL II INV TEMP CODE**	T3B	**TEMP =**	165	**C**		
CL II DIV 2 GRPS F&G	**TEMP CODE**	T3B	**1.0 SF ON PWM INVERTER**	**POWER**							
CL II ZONE 22 GRPS IIIB	**TEMP=**	165	**C**								

YR

AC Induction Motor Performance Data
Record # 101436
Preliminary Data Sheet

Winding: 10WGZ894-R001	**Type:** 1048M	**Enclosure:** TEFC

Nameplate Data			
Rated Output (HP)			25
Volts			230/460
Full Load Amps			56/28
R.P.M.			3545
Hz	60	**Phase**	3
NEMA Design Code	A	**KVA Code**	J
Service Factor (S.F.)			1.15
NEMA Nom. Eff.	93	**Power Factor**	88
Rating - Duty			40C AMB-CONT
S.F. Amps			64/32

460 V, 60 Hz: High Voltage Connection	
Full Load Torque	36.52 LB-FT
Start Configuration	direct on line
Breakdown Torque	178 LB-FT
Pull-up Torque	69.5 LB-FT
Locked-rotor Torque	88.2 LB-FT
Starting Current	244 A
No-load Current	9.39 A
Line-line Res. @ 25ºC	0.214 Ω
Temp. Rise @ Rated Load	57°C
Temp. Rise @ S.F. Load	69°C
Locked-rotor Power Factor	22.6
Rotor inertia	2.06 lb-ft²

Load Characteristics 460 V, 60 Hz, 25 HP

% of Rated Load	**25**	**50**	**75**	**100**	**125**	**150**	**S.F.**
Power Factor	53	77	85	88	90	91	89
Efficiency	85.1	91.5	92.7	93.1	92.8	92.1	92.9
Speed	3586	3572	3560	3544	3530	3514	3536
Line amperes	11.73	16.2	21.57	28.06	34.58	41.48	32

ABB Motors and Mechanical Inc.

WINDING # 10WGZ894

25 HP 3 PH 60 HZ 3545 RPM 460 V 1048M

Typical performance - not guaranteed values.

TORQUES(LB-FT): PO=178 PU=69.5 LR=88.2 LRA=244

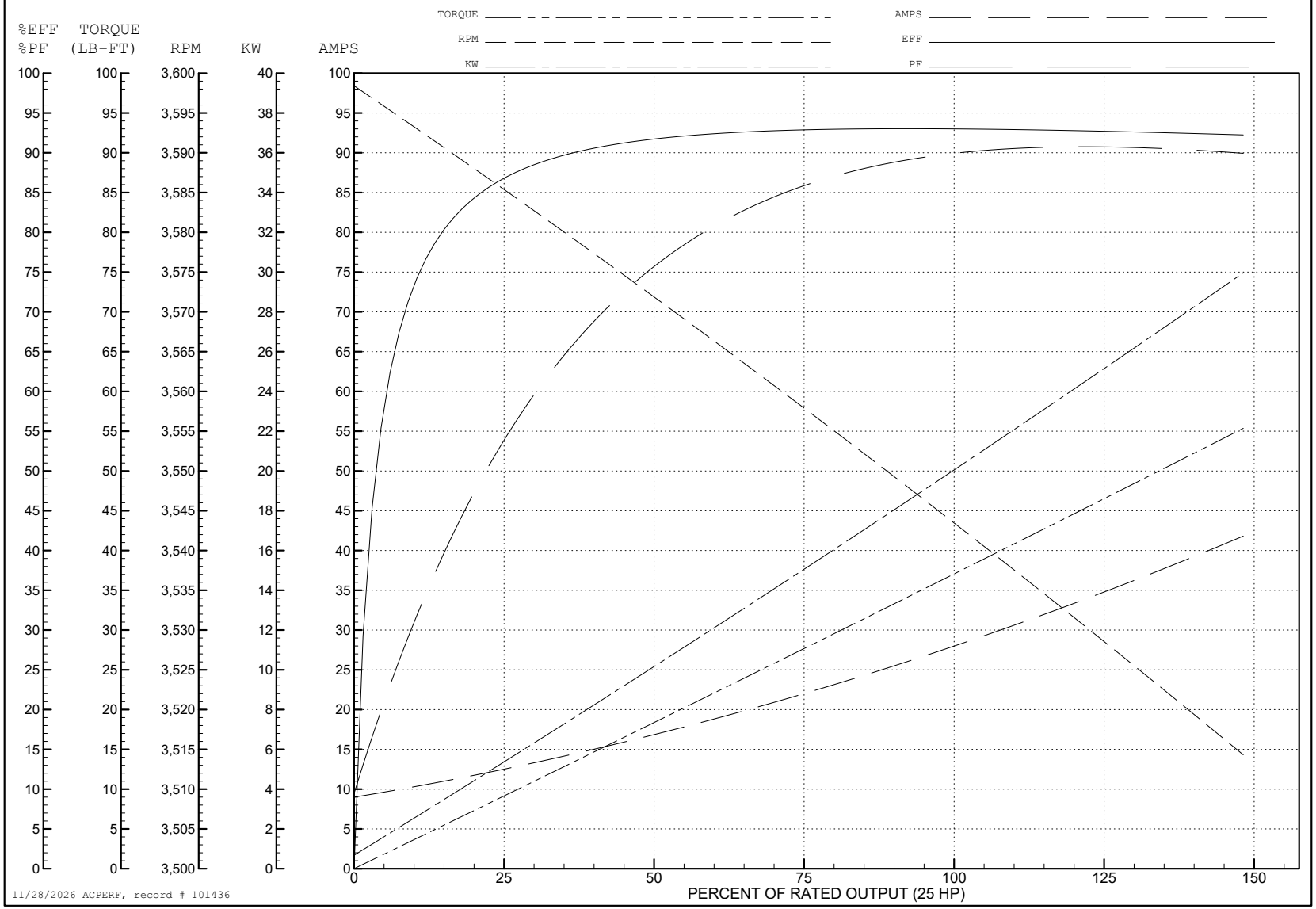

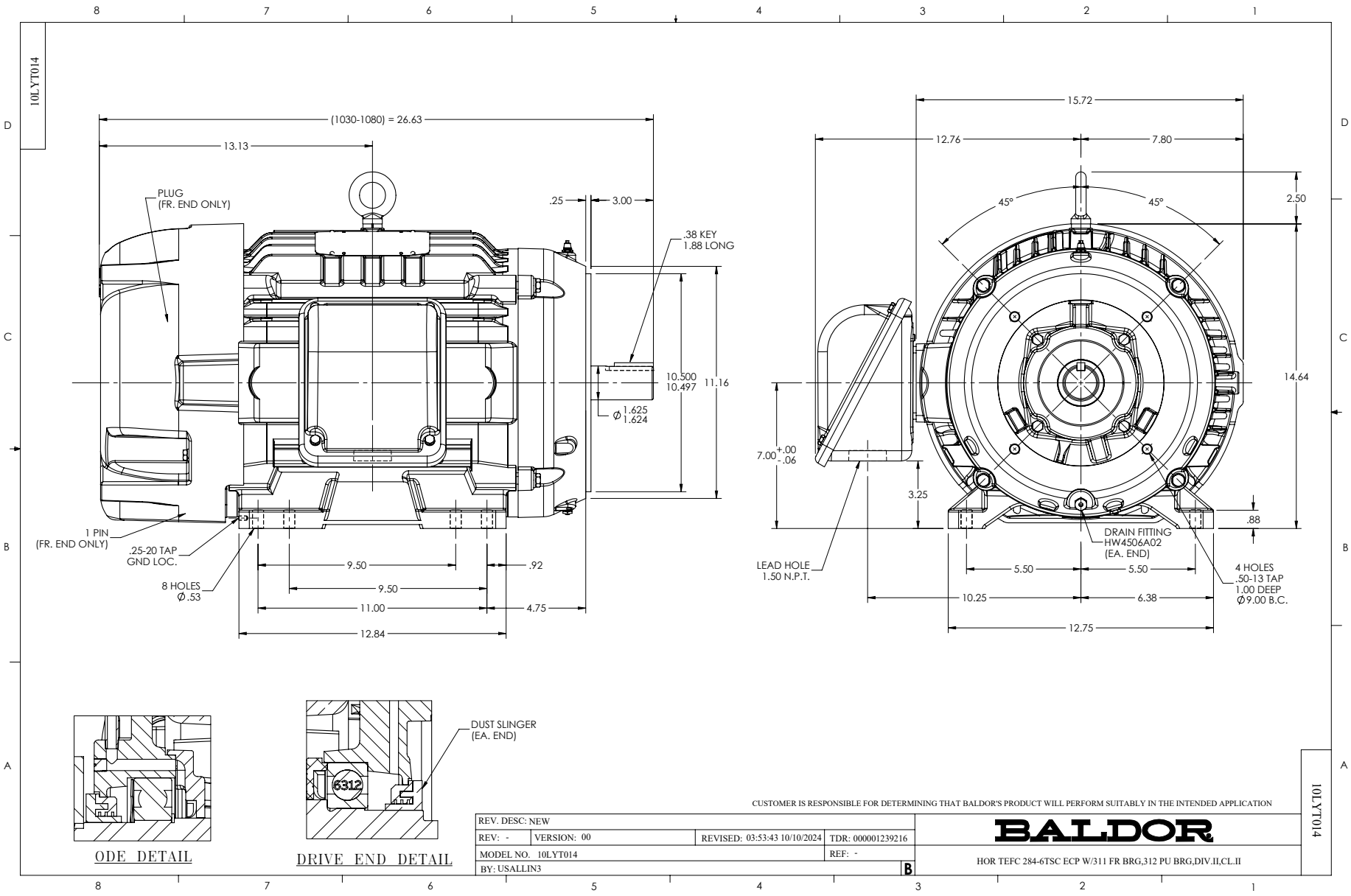
10LYT014
(1030-1080) = 26.63
13.13
PLUG
(FR. END ONLY)
.25
3.00
.38 KEY
1.88 LONG
10.500
10.497
11.16
Ø1.625
1.624
1 PIN
(FR. END ONLY)
.25-20 TAP
GND LOC.
8 HOLES
Ø.53
9.50
.92
9.50
11.00
4.75
12.84
15.72
12.76
7.80
45°
45°
2.50
14.64
7.00 +.00 -.06
3.25
.88
DRAIN FITTING
HW4506A02
(EA. END)
LEAD HOLE
1.50 N.P.T.
5.50
5.50
4 HOLES
.50-13 TAP
1.00 DEEP
Ø9.00 B.C.
10.25
6.38
12.75
DUST SLINGER
(EA. END)
6312
ODE DETAIL
DRIVE END DETAIL
CUSTOMER IS RESPONSIBLE FOR DETERMINING THAT BALDOR'S PRODUCT WILL PERFORM SUITABLY IN THE INTENDED APPLICATION
REV. DESC: NEW
REV: - VERSION: 00 REVISED: 03:53:43 10/10/2024 TDR: 000001239216
MODEL NO. 10LYT014 REF: -
BY: USALLIN3 B
BALDOR
HOR TEFC 284-6TSC ECP W/311 FR BRG,312 PU BRG,DIV.II,CL.II
10LYT014

CD0180

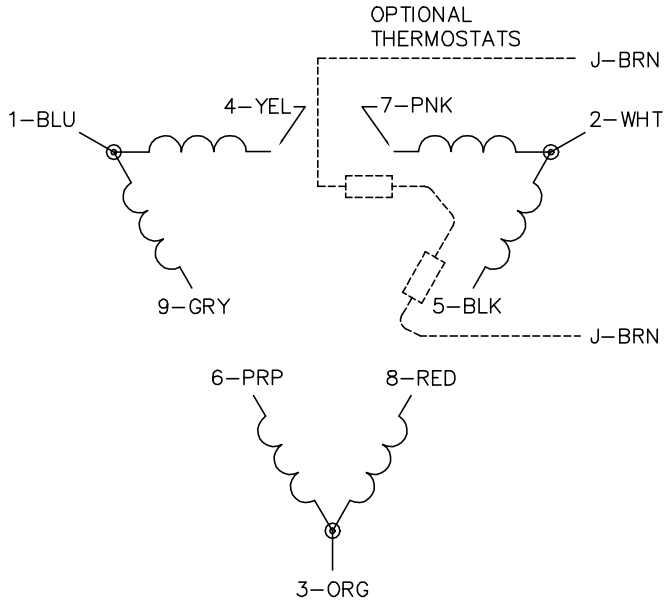

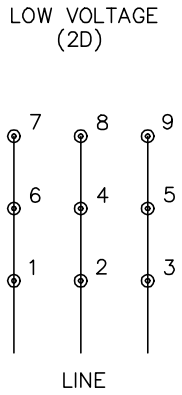

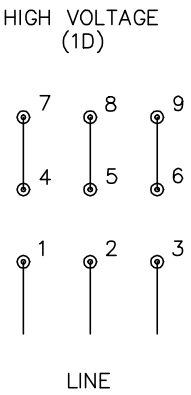

NOTES:

1. INTERCHANGE ANY TWO LINE LEADS TO REVERSE ROTATION.
2. OPTIONAL THERMOSTATS ARE PROVIDED WHEN SPECIFIED.
3. ACTUAL NUMBER OF INTERNAL PARALLEL CIRCUITS MAY BE A MULTIPLE OF THOSE SHOWN ABOVE.
4. LEAD COLORS ARE OPTIONAL. LEADS MUST ALWAYS BE NUMBERED AS SHOWN.

CD0180

REV. DESC: ADD CLASS CONN00000007		
REV. LTR: D	VERSION: 01	TDR: 000001099922
FILE: \AAA\00005\148	REVISED: 10:25:29 02/19/2019	BY: ENBRIR0
MTL: –		

BALDOR - RELIANCE®

3PH, DV, 9 LEADS, DELTA CONNECTION

SH 1 of 1