36LYP427

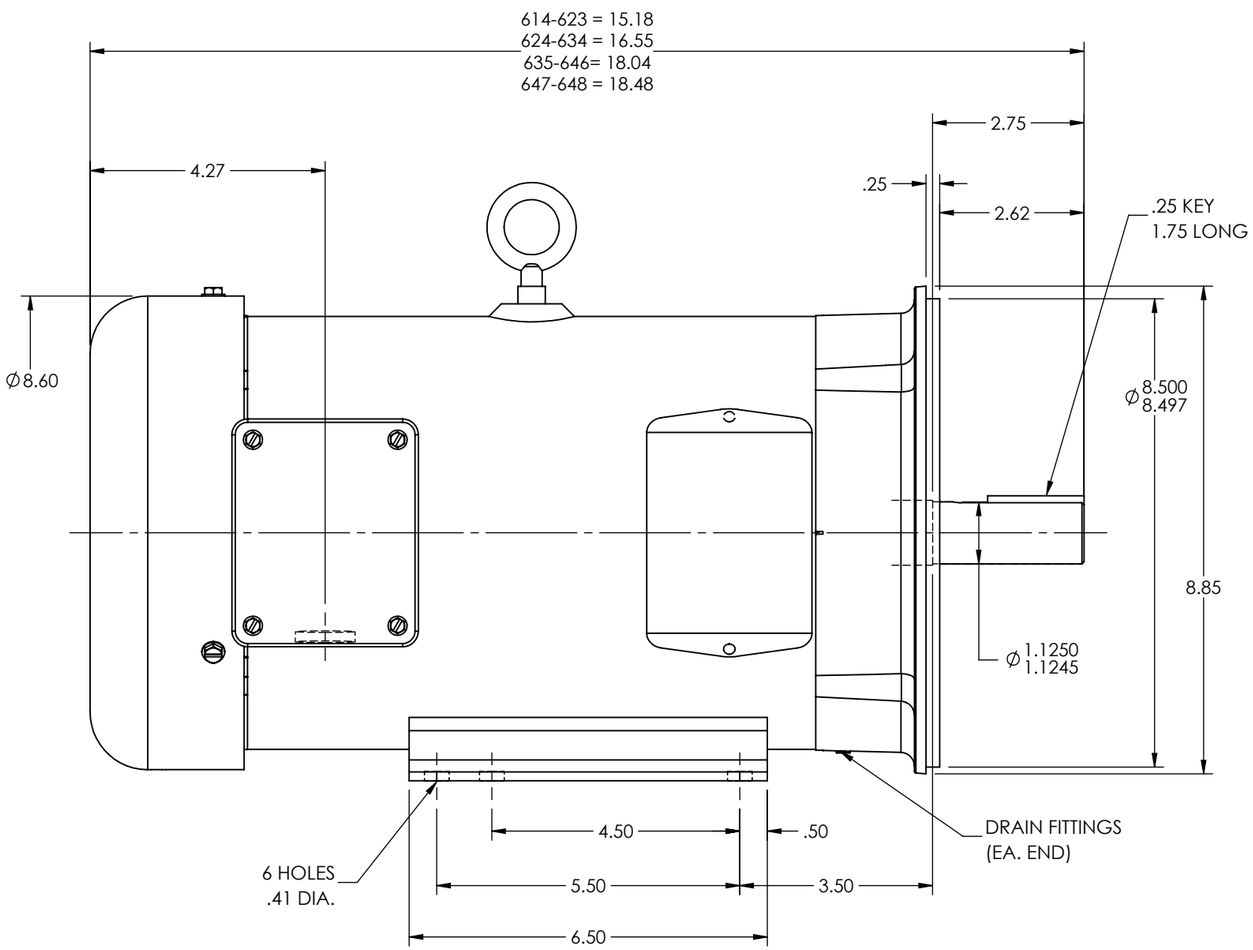

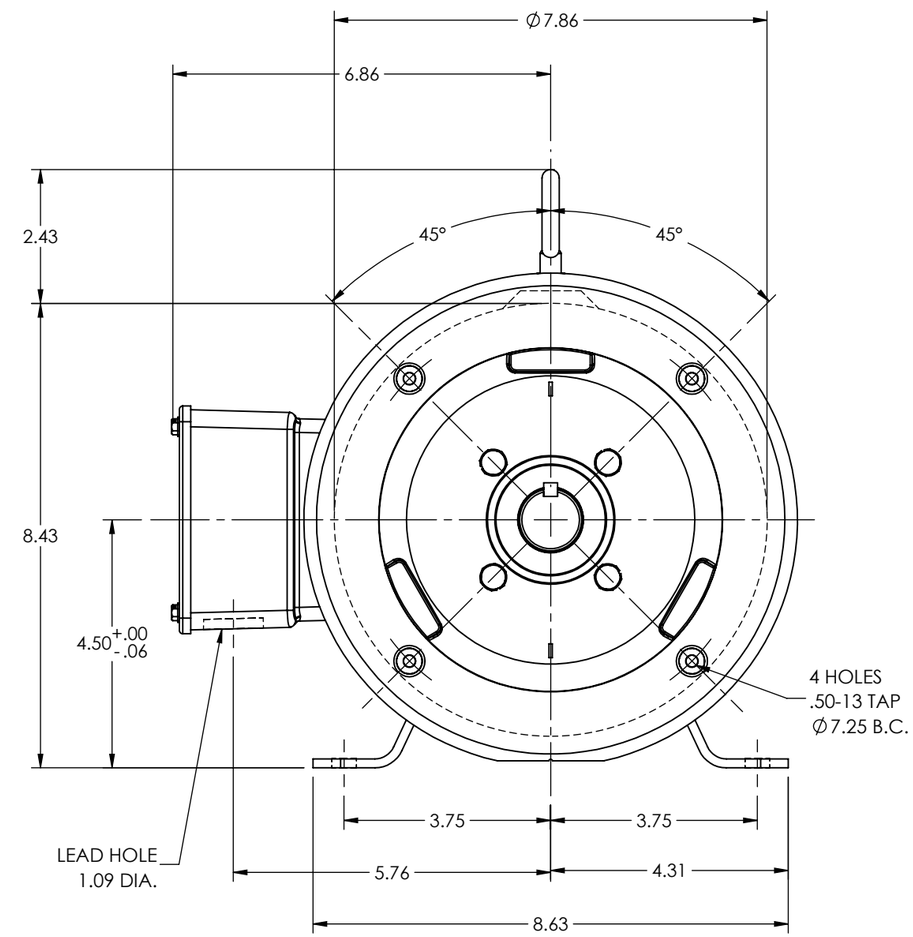

CUSTOMER IS RESPONSIBLE FOR DETERMINING THAT THE PRODUCT WILL PERFORM SUITABLY IN THE INTENDED APPLICATION

REV. DESC: NEW			
REV: -	VERSION: 00	REVISED: 11:49:26 01/03/2024	TDR: 000001223000
MODEL NO. 36LYP427			REF: -
BY: USALMAZ			B

BALDOR - RELIANCE®

HORZ 182-4TC TEFC 36M IP54, GFL BRGS, 'A64 NP, IBOLT

36LYP427